SITE DEVELOPMENT PLANS

AAA CAR WASH - S COLLEGE

WILMINGTON, NC - 911 SOUTH COLLEGE ROAD

NEW HANOVER COUNTY, NORTH CAROLINA

PROJECT CONTACT LIST:

ELECTRIC
DUKE ENERGY
8645 TRADE STREET
LELAND, NC. 28451
910-520-3911 (PHONE)
CONTACT: BILL WILDER
EMAIL:
BILL.WILDER@DUKE-ENERGY.COM

WATER AND SEWER
CAPE FEAR PUBLIC UTILITY AUTH.
235 GOVERNMENT CENTER DR.
WILMINGTON, NC. 28403
910.332.6620 (PHONE)
910.332.6353 (FAX)
CONTACT: BERNICE JOHNSON
EMAIL:BERNICE.JOHNSON@CFPUA.ORG

TELEPHONE
AT&T
102 NORTH 4TH. STREET
WILMINGTON, NC. 28401
910.341.1621 (PHONE)
CONTACT: JAMES BATSON
EMAIL:JB7093@ATT.COM

CITY OF WILIMINGTON
PLANNING AND DEVELOPMENT
305 CHESTNUT STREET
WILMINGTON, NC. 28402
910.341.3260 (PHONE)
CONTACT: JEFF WALTON
EMAIL:
JEFF.WALTON@WILMINGTONNC.GOV

STORMWATER & EROSION CONTROL
ENGINEERING DEPARTMENT
212 OPERATIONS CENTER DR.
WILMINGTON, NC. 28412
910.341.5856 (PHONE)
910.341.5881 (FAX)
CONTACT: ROB GORDON
EMAIL: ROB.GORDON@WILMINGTONNC.GOV

GAS
PIEDMONT NATURAL GAS
1321 SOUTH 10TH STREET
WILMINGTON, NC. 28401
CONTACT: PAUL GONKA
910.251.2810 (PHONE)
910.350.2263 (FAX)
EMAIL:
PAUL.GONKA@DUKE-ENERGY.COM

STATE DEPT. OF TRANSPORTATION
NORTH CAROLINA DEPT. OF
TRANSPORTATION (NCDOT)
DISTRICT 3
300 DIVISION DRIVE
WILMINGTON, NC. 28401
910-398-9100 (PHONE)
CONTACT: BENJAMIN T. HUGHES, P.E.
E-MAIL:BTHUGHES@NCDOT.GOV

GENERAL NOTES

1. INFORMATION CONCERNING UNDERGROUND UTILITIES WAS OBTAINED FROM AVAILABLE RECORDS AND FIELD CONDITIONS WHEN POSSIBLE, BUT THE CONTRACTOR MUST DETERMINE THE EXACT LOCATION AND ELEVATION OF ALL EXISTING UTILITIES BY DIGGING TEST PITS BY HAND AT ALL UTILITY CROSSING WELL IN ADVANCE OF TRENCHING. IF THE CLEARANCES ARE LESS THAN SPECIFIED ON THE PLANS OR 12", WHICHEVER IS LESS, CONTACT FREELAND AND KAUFFMAN, INC. AT 1-864-233-5497 AND OWNER PRIOR TO PROCEEDING WITH CONSTRUCTION.

2. THE CONTRACTOR SHALL INCLUDE IN HIS CONTRACT PRICE THE REMOVAL AND DISPOSAL OF ANY EXCESS TOPSOIL HE DETERMINES IS NOT REQUIRED TO PERFORM THE FINAL GRADING AND LANDSCAPING OPERATION.

3. THE CONTRACTOR IS RESPONSIBLE FOR THE DESIGN AND IMPLEMENTATION OF ALL REQUIRED/NECESSARY SHEETING, SHORING, AND SPECIAL EXCAVATION MEASURES REQUIRED ON THE PROJECT TO MEET OSHA, FEDERAL, STATE AND LOCAL REGULATIONS PURSUANT TO THE INSTALLATION OF THE WORK INDICATED ON THE DRAWINGS. OWNER, AND FREELAND & KAUFFMAN, INC. ACCEPT NO RESPONSIBILITY FOR THE DESIGN TO INSTALL SAID ITEMS.

4. CALL UTILITY LOCATOR SERVICE 72 HOURS IN ADVANCE OF DIGGING AT 811.

5. ALL WORK SHALL MEET OR EXCEED SITE WORK SPECIFICATIONS AND CONFORM TO THE CITY OF WILMINGTON STANDARDS AND SPECIFICATIONS.

6. ALL CURB/HANDICAP RAMP DESIGNS SHALL CONFORM TO ADA STANDARDS OR THE CITY OF WILMINGTON STANDARDS, WHICHEVER IS MORE RESTRICTIVE.

7. PRE-CAST DRAINAGE AND SANITARY SEWER STRUCTURES HAVE BEEN SPECIFIED ON THE PLANS. OWNER, AND FREELAND & KAUFFMAN, INC., HOWEVER, ASSUME NO RESPONSIBILITY FOR THESE STRUCTURES AS FIELD CONDITIONS DURING CONSTRUCTION OFTEN DICTATE MINOR ELEVATION ADJUSTMENTS. THE CONTRACTOR ASSUMES ALL RESPONSIBILITY AND EXPENSE FOR MODIFYING THESE STRUCTURES TO ACCOMMODATE THESE FIELD ADJUSTMENTS.

8. THE CONTRACTOR SHALL INCLUDE IN THE CONTRACT PRICE DAILY RECORD KEEPING OF THE AS-BUILT CONDITION OF ALL OF THE UNDERGROUND UTILITIES CONSTRUCTION STAKEOUT ASSOCIATED WITH THE PROJECT, AND PREPARATION OF ANY OTHER REQUIRED AS-BUILT PLANS TO BE SUBMITTED TO NCDEQ AND/OR THE CITY OF WILMINGTON, AND ALL OTHER INFORMATION REQUIRED IN CONNECTION WITH RELEASE OF BONDS, PERMITS TO OPERATE, ETC. ALL SURVEYS SHALL BE PERFORMED BY A SURVEYOR LICENSED IN THE STATE OF NORTH CAROLINA.

9. ALL WATER LINE AND SEWER LINE INSTALLATION SHALL CONFORM TO THE STANDARDS AND DETAILS OF THE CITY OF WILMINGTON AND CAPE FEAR PUBLIC UTILITY AUTHORITY.

10. THE NOTICE OF INTENT, C-SWPPP, AND NPDES COVERAGE LETTER MUST BE KEPT ON THE JOB SITE AND SHOWN UPON REQUEST.

11. THE CONTRACTOR SHALL INCLUDE IN THE CONTRACT PRICE ALL MATERIAL AND LABOR ASSOCIATED WITH THE REQUIRED TESTING OF THE WATER AND SEWER LINES, BACKFLOW PREVENTION DEVICES, ETC. TO THE SATISFACTION OF THE CITY OF WILMINGTON AND CAPE FEAR PUBLIC UTILITY AUTHORITY SUCH THAT THE PERMIT TO OPERATE IS ISSUED.

12. THE CONTRACTOR SHALL INCLUDE IN THE CONTRACT PRICE ANY DE-WATERING NECESSARY TO CONSTRUCT THE PROJECT AS SHOWN ON THE PLANS.

13. SEDIMENT CONTROL MEASURES MUST BE INSPECTED AND MAINTAINED REGULARLY TO ENSURE THAT THE INTENDED PURPOSES ARE ACCOMPLISHED.

14. ALL DRAINAGE STRUCTURES MUST MEET NCDOT'S STANDARDS AND SPECIFICATIONS.

15. ALL NECESSARY INSPECTIONS AND/OR CERTIFICATIONS REQUIRED BY CODES AND/OR UTILITY SERVICE COMPANIES SHALL BE PERFORMED PRIOR TO ANNOUNCED BUILDING POSSESSION AND THE FINAL CONNECTION OF SERVICES.

16. CONTRACTOR SHALL PROVIDE AN ASBUILT SURVEY OF THE UNDERGROUND DETENTION SYSTEM. SURVEY SHALL BE DONE BY A NC REGISTERED SURVEYOR.

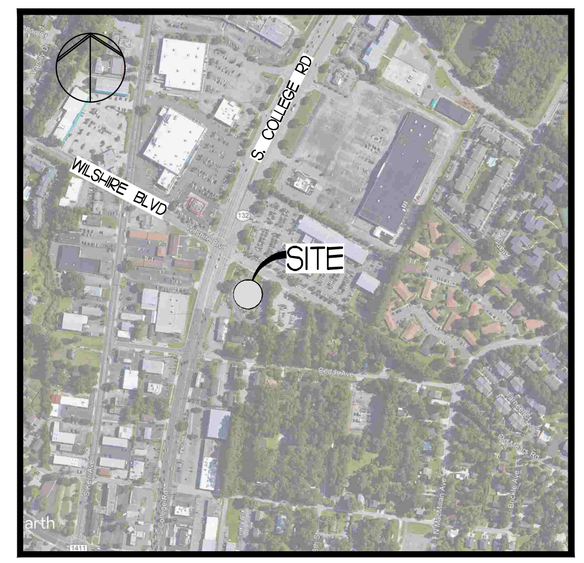

SITE LOCATION MAP

(SCALE: 1"=1000')

PROPERTY INFORMATION

SITE ADDRESS - 911 S. COLLEGE RD, WILMINGTON NC 28403
PARCEL ID - R05515-007-002-000
ZONED - CB & RB-10
PROJECT ACREAGE - 1.41 AC
NUMBER OF BUILDINGS - 1 (1 STORY BUILDING)
BUILDING HEIGHT - 28' HIGHEST
BUILDING SQUARE FOOTAGE - ±2,974 SF
CAMA LAND USE - URBAN
SETBACKS -
REQUIRED - 20' FRONT / 10' REAR / 0' SIDE
BUILDING LOT COVERAGE -
EXISTING - 9.89% (6,076 SF)
PROPOSED - 4.83% (2,974 SF)
IMPERVIOUS AREA
EXISTING (TO BE REMOVED) - 28,834 SF
PROPOSED - 32,670 SF
LATITUDE - 34°13'04.5" N LONGITUDE - 77°53'04.4" W

Sheet List Table

Sheet Number	Sheet Title
1	COVER
2	SURVEY
3	DEMOLITION PLAN
4	SITE PLAN
5	DRIVEWAY PLAN
6	SITE DETAILS 1 OF 2
7	SITE DETAILS 2 OF 2
8	GRADING PLAN
9	STORM PROFILES
10	STORMDRAIN DETAILS
11	SWPPP PHASE 1
12	SWPPP PHASE 2
13	SWPPP DETAILS 1 OF 5
14	SWPPP DETAILS 2 OF 5
15	SWPPP DETAILS 3 OF 5
16	SWPPP DETAILS 4 OF 5
17	SWPPP DETAILS 5 OF 5
18	UTILITY PLAN
19	UTILITY DETAILS 1 OF 2
20	UTILITY DETAILS 2 OF 2
21	LANDSCAPE PLAN

REVISIONS	DATE	BY

ENGINEER-
FREELAND and KAUFFMAN, INC.
Engineers - Landscape Architects
209 WEST STONE AVENUE
GREENVILLE, SC 29609
864.233.5497 (TEL.)
864.233.8915 (FAX)
CONTACT: TODD SIMMONS E-MAIL: TSIMMONS@FK-INC.COM

- ❑ Water: __6560___ GPD (current use)
- ❑ Water: __1200___ GPD (proposed use)
- ❑ Sewer: __6560___ GPD (current use)
- ❑ Sewer: __1200___ GPD (proposed use)

Approved Construction Plan

	Name	Date
Planning		
Traffic		
Fire		

OWNER/DEVELOPER-
MPV PROPERTIES
2400 SOUTH BOULEVARD
SUITE 300
CHARLOTTE, NC 28203
704.248.2100 (TEL.)
CONTACT: BRETT JARRETT
336.480.7173 (TEL.)
E-MAIL:BJARRETT@MPVRE.COM

SHEET 1
JUNE 17, 2019

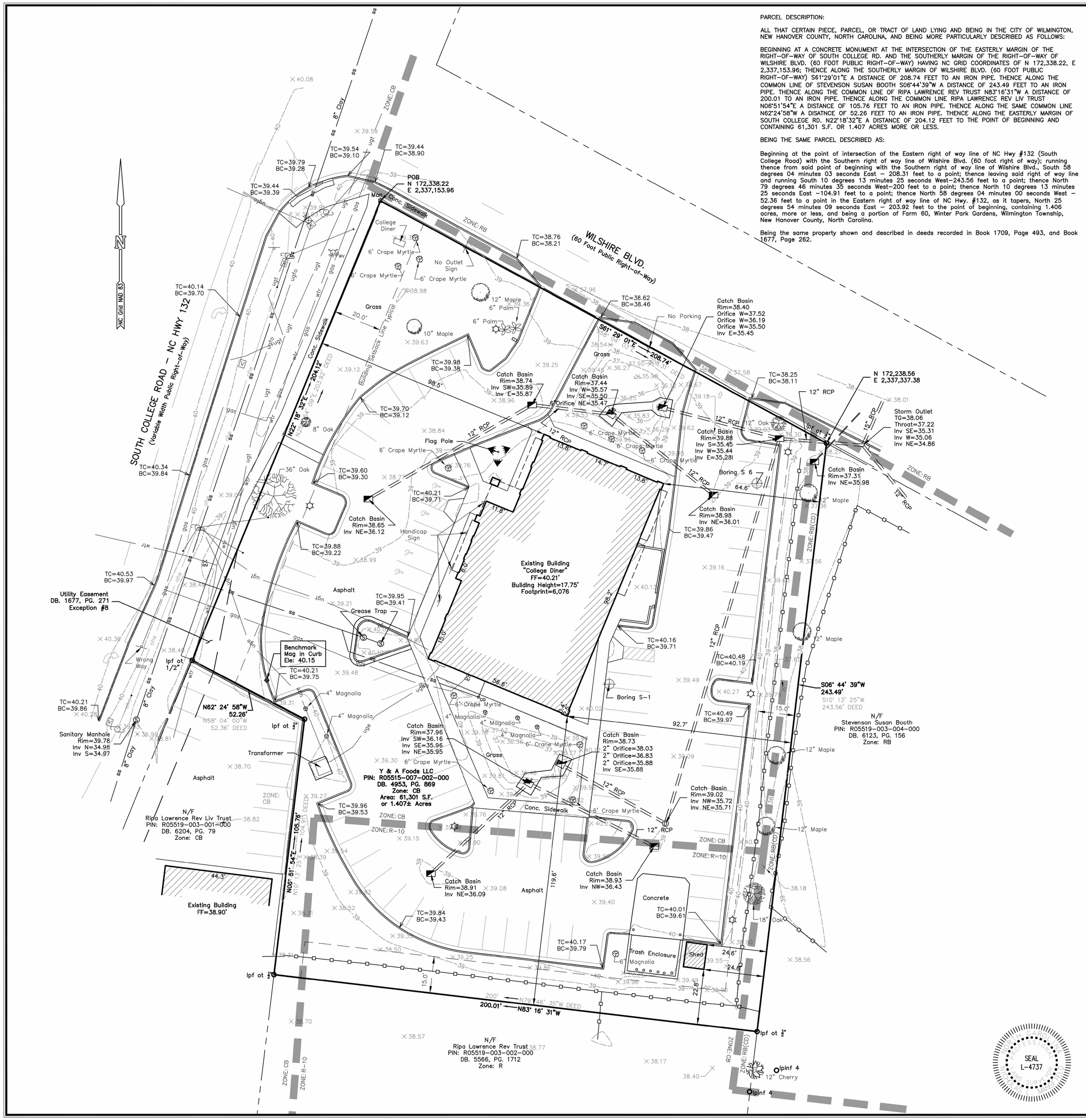

PARCEL DESCRIPTION:

ALL THAT CERTAIN PIECE, PARCEL, OR TRACT OF LAND LYING AND BEING IN THE CITY OF WILMINGTON, NEW HANOVER COUNTY, NORTH CAROLINA, AND BEING MORE PARTICULARLY DESCRIBED AS FOLLOWS:

BEGINNING AT A CONCRETE MONUMENT AT THE INTERSECTION OF THE EASTERLY MARGIN OF THE RIGHT-OF-WAY OF SOUTH COLLEGE RD. AND THE SOUTHERLY MARGIN OF THE RIGHT-OF-WAY OF WILSHIRE BLVD. (60 FOOT PUBLIC RIGHT-OF-WAY) HAVING NC GRID COORDINATES OF N 172,338.22, E 2,337,153.96; THENCE ALONG THE SOUTHERLY MARGIN OF WILSHIRE BLVD. (60 FOOT PUBLIC RIGHT-OF-WAY) S61°29'01"E A DISTANCE OF 208.74 FEET TO AN IRON PIPE. THENCE ALONG THE COMMON LINE OF STEVENSON SUSAN BOOTH S06°44'39"W A DISTANCE OF 243.49 FEET TO AN IRON PIPE. THENCE ALONG THE COMMON LINE OF RIPA LAWRENCE REV TRUST N83°16'31"W A DISTANCE OF 200.01 TO AN IRON PIPE. THENCE ALONG THE COMMON LINE RIPA LAWRENCE REV LIV TRUST N06°51'54"E A DISTANCE OF 105.76 FEET TO AN IRON PIPE. THENCE ALONG THE SAME COMMON LINE N62°24'58"W A DISATNCE OF 52.26 FEET TO AN IRON PIPE. THENCE ALONG THE EASTERLY MARGIN OF SOUTH COLLEGE RD. N22°18'32"E A DISTANCE OF 204.12 FEET TO THE POINT OF BEGINNING AND CONTAINING 61,301 S.F. OR 1.407 ACRES MORE OR LESS.

BEING THE SAME PARCEL DESCRIBED AS:

Beginning at the point of intersection of the Eastern right of way line of NC Hwy #132 (South College Road) with the Southern right of way line of Wilshire Blvd. (60 foot right of way); running thence from said point of beginning with the Southern right of way line of Wilshire Blvd., South 58 degrees 04 minutes 03 seconds East – 208.31 feet to a point; thence leaving said right of way line and running South 10 degrees 13 minutes 25 seconds West–243.56 feet to a point; thence North 79 degrees 46 minutes 35 seconds West–200 feet to a point; thence North 10 degrees 13 minutes 25 seconds East –104.91 feet to a point; thence North 58 degrees 04 minutes 00 seconds West – 52.36 feet to a point in the Eastern right of way line of NC Hwy. #132, as it tapers, North 25 degrees 54 minutes 09 seconds East – 203.92 feet to the point of beginning, containing 1.406 acres, more or less, and being a portion of Farm 60, Winter Park Gardens, Wilmington Township, New Hanover County, North Carolina.

Being the same property shown and described in deeds recorded in Book 1709, Page 493, and Book 1677, Page 262.

UTILITY INFORMATION

WATER AND SEWER:
CAPE FEAR PUBLIC UTILITY AUTHORITY
(910) 332-6550

ELECTRIC:
DUKE ENERGY
(800) 653-5307

GAS:
PIEDMONT NATURAL GAS COMPANY
(800) 752-7504

TELEPHONE:
AT&T
(800) 331-0500

CABLE:
TIME WARNER CABLE/ SPECTRUM
(800) 892-4357

FLOOD INFORMATION

FLOOD ZONE "X" (MINIMAL FLOOD HAZARD)
PER FEMA MAP NO. 3720313700K
EFFECTIVE DATE: 08/28/2018

PARKING

REGULAR = 77
HANDICAP = 4

ZONING DATA

ZONED: (CB)

SETBACK LINES:
FRONT: 20'
SIDE: 0'
REAR: 10'

MAXIMUM BUILDING HEIGHT: 45'

ZONED: [RB(CD)]

SETBACK LINES:
FRONT: 25'
SIDE: 25' (CORNER LOT)
REAR: 15'

MAXIMUM BUILDING HEIGHT: 35'

ZONED: (R-10)

SETBACK LINES:
FRONT: 30'
SIDE: 15'
REAR: 25'

MAXIMUM BUILDING HEIGHT: 35'

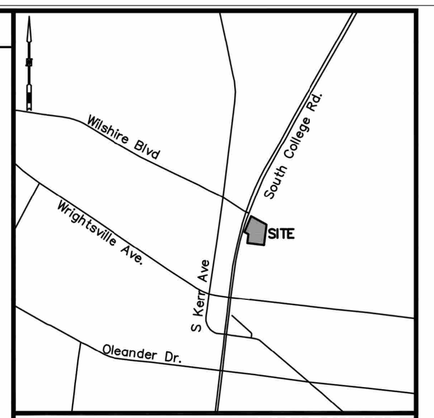

LOCATION MAP
SCALE: 1"=2,000'

NOTES:

1. NORTH ARROW, BEARINGS, AND COORDINATES ARE BASED UPON NC GRID NAD 83 ESTABLISHED BY STATIC GPS OBSERVATION AND OPUS SOLUTION.
2. ELEVATIONS ARE BASED UPON NAVD 88 ESTABLISHED BY STATIC GPS OBSERVATION AND OPUS SOLUTION.
3. REFERENCE IS HEREBY MADE TO THE FOLLOWING MAPS:
   A. DEED BOOK 4953, PAGE 869 RECORDED IN NEW HANOVER COUNTY REGISTER OF DEEDS OFFICE.
4. THIS SURVEY MEETS THE REQUIREMENT FOR A CLASS "A" SURVEY (1:10,000) AS DEFINED FOR THE STANDARDS OF PRACTICE FOR LAND SURVEYING IN THE STATE OF NORTH CAROLINA.
5. THE AREA WAS DETERMINED BY DMD METHOD.
6. ALL HORIZONTAL DISTANCES ARE GROUND DISTANCES.
7. THE UNDERGROUND UTILITIES SHOWN HAVE BEEN LOCATED FROM ONE CALL TICKET, FIELD SURVEY INFORMATION AND EXISTING DRAWINGS. THE SURVEYOR MAKES NO GUARANTEE THAT THE UNDERGROUND UTILITIES SHOWN COMPRISE ALL SUCH UTILITIES IN THE AREA, EITHER IN SERVICE OR ABANDONED. THE SURVEYOR FURTHER DOES NOT WARRANT THAT THE UNDERGROUND UTILITIES SHOWN ARE IN THE EXACT LOCATION INDICATED, ALTHOUGH HE DOES CERTIFY THAT THEY ARE LOCATED AS ACCURATELY AS POSSIBLE FROM INFORMATION AVAILABLE. THE SURVEYOR HAS NOT PHYSICALLY LOCATED THE UNDERGROUND UTILITIES.
8. THE PROPERTY APPEARS TO BE IN FEMA ZONE "X" (AREA OF MINIMAL FLOOD HAZARD), PER MAP #3720313700K; EFFECTIVE. 08/20/2018
9. ZONING PROVIDED BY THE CITY OF WILMINGTON TO BE USED FOR INFORMATIONAL PURPOSES ONLY.
10. TOTAL AREA = 61,301 S.F. = 1.407± ACRES
11. NO EVIDENCE OF RECENT EARTH MOVING, BUILDING CONSTRUCTION, STREET OR SIDEWALK CONSTRUCTION WAS OBSERVED ON SITE.
12. THE SITE DOES NOT APPEAR TO HAVE BEEN USED AS A SOLID WASTE DUMP, SUMP, OR SANITARY LANDFILL.
13. NO VISIBLE FLAGGING EVIDENCE OF POTENTIAL WETLANDS WERE OBSERVED ON THE SUBJECT PROPERTY AT THE TIME THE SURVEY WAS CONDUCTED, NOR HAVE WE RECEIVED ANY DOCUMENTATION OF ANY WETLANDS BEING LOCATED ON THE SUBJECT PROPERTY.

Exceptions to Title, Schedule B, Part II, First American Title Insurance Company
File No. 19-0571, Effective Date: March 6, 2019

1–2. (NOT A SURVEY MATTER)

3. Subordination, Estoppel, Nondisturbance and Attornment Agreement recorded in Book 5924, Page(s) 2187, New Hanover County Registry. (MEMO OF LEASE NOT A SURVEY MATTER)

4. Tenant Subordination and Attornment Agreement recorded in Book 5987, Page(s) 917, New Hanover County Registry. (NOT A SURVEY MATTER)

5. Memorandum of Lease in favor of Laterna, Inc. recorded in Book 5038, Page(s) 661, New Hanover County Registry. (NOT A SURVEY MATTER)

6. Memorandum and Notice of Lease Agreement in favor of The Lamar Companies recorded in Book 5918, Page(s) 2805, New Hanover County Registry. (NOT A SURVEY MATTER)

7. Easement in favor of Carolina Power & Light Company recorded in Book 1727, Page(s) 221, New Hanover County Registry. (AFFECTS THE SUBJECT PARCEL, BLANKET IN NATURE OVER ELECTRICAL LINES)

8. General Utility Easements in favor of the City of Wilmington recorded in Book 1677, Page(s) 271 and Book 1677, Page 265, New Hanover County Registry. (AFFECTS THE SUBJECT PARCEL AS SHOWN HEREON)

9. Right of Way in favor of State Highway and Public Works Commission recorded in Book 606, Page(s) 615, New Hanover County Registry. (CURRENT ROAD RIGHT-OF-WAY SHOWN HEREON)

10. Title to any portion of Land lying within the right of way of South College Road (NC Hwy 132) and Wilshire Boulevard. (PARCEL LINES AND RESPECTIVE RIGHT-OF-WAY LINES ARE CONTIGUOUS LEAVING NO GAPS OR GORES)

11. Building restriction lines, easements and other matters shown on plat recorded in Map Book 3, Page 38, New Hanover County Registry. (DOES NOT AFFECT THE SUBJECT PARCEL, NOTHING TO PLOT)

12. The Company does not insure the calculation of the acreage or square footage of the land. (CURRENT SURVEY SHOWN HEREON)

13. Rights of tenant(s) in possession under unrecorded lease(s). (NOT A SURVEY MATTER)

14. Any discrepancy, conflict, access, shortage in area or boundary lines, encroachment, encumbrance, violation, variation, overlap, setback, easement or claim of easement, riparian right, and title to land within roads, ways, railroads, watercourses, burial grounds, marshes, dredged or filled areas or land below the mean highwater mark or within the bounds of any adjoining body of water, or other adverse circumstance affecting the Title that would be disclosed by a current inspection and accurate and complete land survey of the Land. (CURRENT SURVEY SHOWN HEREON)

LEGEND

PROPERTY LINE	DRAINAGE MANHOLE
ADJOINER PROPERTY LINE	CATCH BASIN W/GRATE
EASEMENT LINE	SANITARY SEWER MANHOLE
STORM DRAINAGE PIPE	WATER METER
ss — SANITARY SEWER LINE	WV WATER VALVE
wtr — WATER LINE	HYDRANT
gas — GAS LINE	CO CLEANOUT
ugfo — UNDERGROUND FIBER OPTIC	GAS METER
ugt — UNDERGROUND TELEPHONE	ELECTRIC METER
uge — UNDERGROUND ELECTRIC	LIGHT POLE
ohe — OVERHEAD ELECTRIC	UTILITY POLE
oht — OVERHEAD TELEPHONE	UNDERGROUND UTILITY BOX
trf — OVERHEAD TRAFFIC WIRES	CROSSWALK SIGNAL
WOOD FENCE	MAILBOX
OVERHANG	SIGN
GUIDE WIRE	TPED TELEPHONE PEDESTAL
TRAFFIC ARROWS	PINF IRON PIN–REBAR FOUND
	IPF IRON PIPE FOUND
	MON CONCRETE MONUMENT FOUND
	GROUND LIGHT

TO: CAROLINA MOTOR CLUB, INC.
FIRST AMERICAN TITLE INSURANCE COMPANY

THIS IS TO CERTIFY THAT THIS MAP OR PLAT AND THE SURVEY ON WHICH IT IS BASED WERE MADE IN ACCORDANCE WITH THE 2016 MINIMUM STANDARD DETAIL REQUIREMENTS FOR ALTA/NSPS LAND TITLE SURVEYS, JOINTLY ESTABLISHED AND ADOPTED BY ALTA AND NSPS, AND INCLUDES ITEMS 1, 2, 3, 4, 5, 6B, 7A, 7C, 8, 9, 11, 13, 14, 15, 16, 17, 18, 19, AND 20 OF TABLE A THEREOF. THE FIELD WORK WAS COMPLETED ON APRIL 12, 2019.

SEAL
L-4737

NICHOLAS L. MANSFIELD DATE: 05/21/2019 REGISTRATION #L-4737

* THE WORDS "CERTIFY", "CERTIFICATES" OR "CERTIFICATION" AS USED HEREON ARE UNDERSTOOD TO BE AN EXPRESSION OF PROFESSIONAL OPINION BY THE SURVEYOR, BASED UPON HIS BEST KNOWLEDGE, INFORMATION AND BELIEF, AS SUCH, DO NOT CONSTITUTE A GUARANTEE NOR A WARRANTY, EXPRESSED OR IMPLIED.

SURVEY MATTERS
LAND SURVEYING SERVICES
107 Hillcrest Avenue
Simpsonville, South Carolina 29681
(864) 451-0176
nick@survey-matters.com
NC #P-0869

REVISIONS
2019/05/17 COMMENTS
2019/05/20 COMMENTS
2019/05/21 SPOT ELEVATIONS

ALTA/NSPS LAND TITLE SURVEY
PREPARED FOR:
CAROLINA MOTOR CLUB, INC.
PROPERTY OF:
Y & A FOODS, LLC
911 SOUTH COLLEGE ROAD
WILMINGTON, NORTH CAROLINA

DRAWN	CHECKED
CCS	NLM

SCALE: 1" = 20'
0 10' 20'

DATE OF SURVEY: 04/12/2019
DATE OF PLAT: 04/18/2019

PROJECT NO. 19-048

SHEET NO. 1 of 1

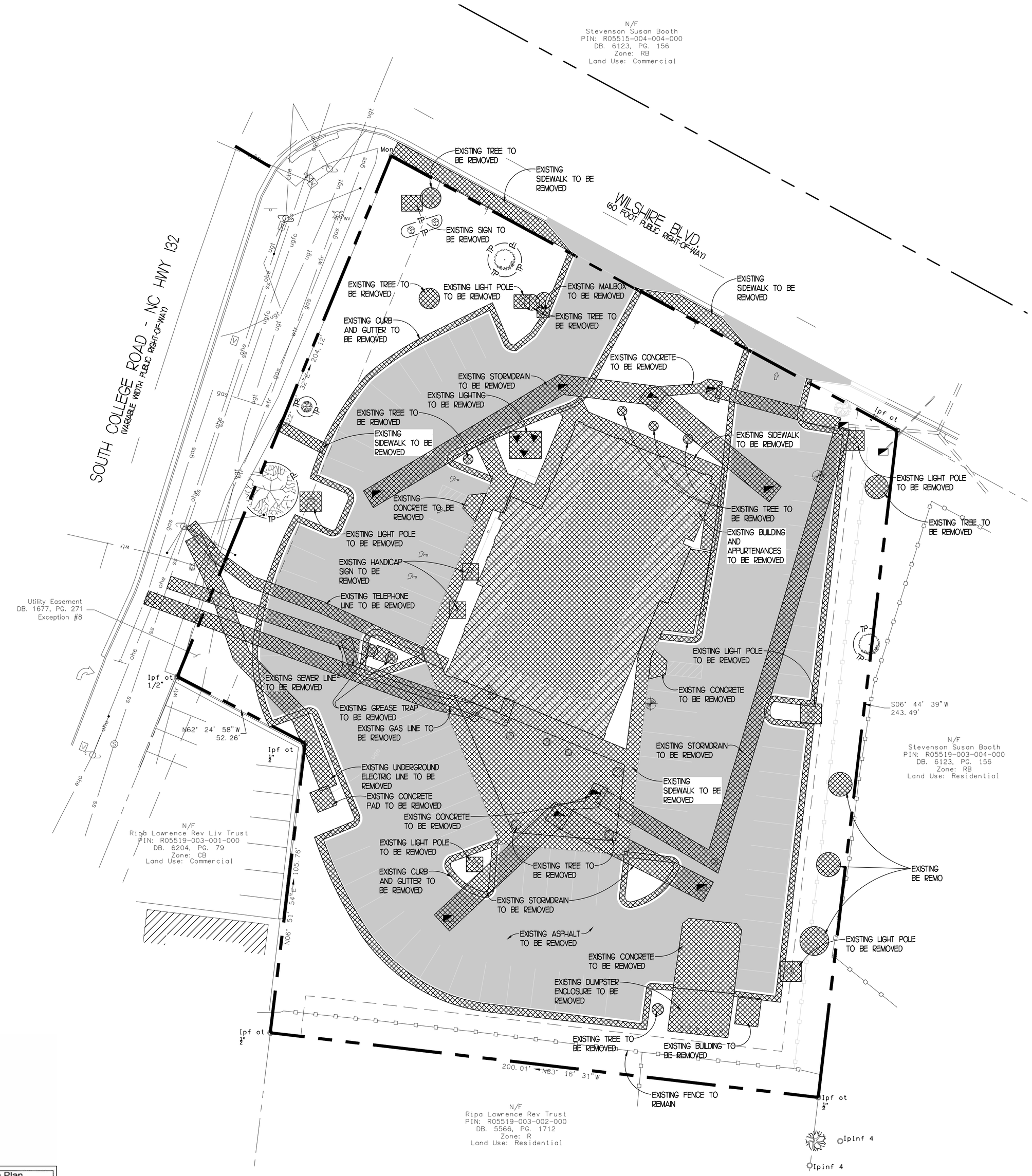

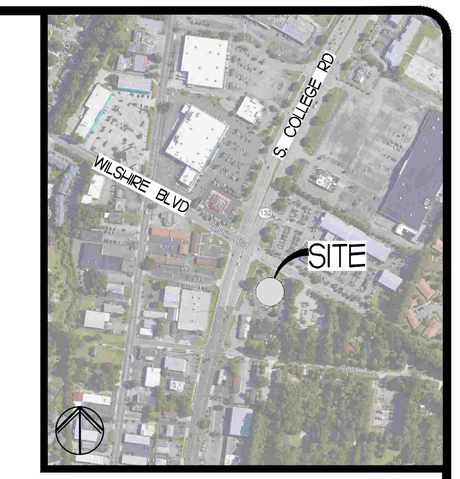

DEMOLITION PLAN NOTES:

1. THE CONTRACTOR IS RESPONSIBLE FOR OBTAINING ALL LOCAL AND STATE PERMITS REQUIRED FOR DEMOLITION WORK.

2. THE CONTRACTOR SHALL INDEMNIFY AND HOLD HARMLESS THE OWNER AND/OR ENGINEER FOR ANY AND ALL INJURIES AND/OR DAMAGES TO PERSONNEL, EQUIPMENT AND/OR EXISTING FACILITIES IN THE DEMOLITION AND CONSTRUCTION DESCRIBED IN THE PLANS AND SPECIFICATIONS.

3. EXISTING CONDITIONS AS DEPICTED ON THESE PLANS ARE GENERAL AND ILLUSTRATIVE IN NATURE AND DO NOT INCLUDE MECHANICAL, ELECTRICAL AND MISCELLANEOUS STRUCTURES. IT IS THE RESPONSIBILITY OF THE CONTRACTOR TO EXAMINE THE SITE AND BE FAMILIAR WITH EXISTING CONDITIONS PRIOR TO BIDDING ON THE DEMOLITION WORK FOR THIS PROJECT. IF CONDITIONS ENCOUNTERED DURING EXAMINATION ARE SIGNIFICANTLY DIFFERENT THAN THOSE SHOWN, THE CONTRACTOR SHALL NOTIFY THE ENGINEER IMMEDIATELY.

4. ALL EXISTING ABOVE AND BELOW GROUND STRUCTURES WITHIN THE LIMITS OF NEW CONSTRUCTION SHALL BE RAZED UNLESS NOTED OTHERWISE WITHIN THIS CONSTRUCTION SET, ARCHITECTURAL PLANS AND/OR PROJECT SPECIFICATIONS. THIS INCLUDES FOUNDATION SLABS, WALLS, AND FOOTINGS.

5. ALL DEMOLITION WASTE AND CONSTRUCTION DEBRIS SHALL BE REMOVED BY THE CONTRACTOR AND DISPOSED OF IN A STATE APPROVED WASTE SITE AND IN ACCORDANCE WITH ALL LOCAL AND STATE CODES AND PERMIT REQUIREMENTS.

6. ALL UTILITY REMOVAL, RELOCATION, CUTTING, CAPPING AND/OR ABANDONMENT SHALL BE COORDINATED WITH THE APPROPRIATE UTILITY COMPANY.

7. THE BURNING OF CLEARED MATERIAL AND DEBRIS SHALL NOT BE ALLOWED UNLESS CONTRACTOR GETS WRITTEN AUTHORIZATION FROM THE AUTHORITIES.

8. EROSION AND SEDIMENTATION CONTROL MEASURES AROUND AREAS OF DEMOLITION SHALL BE INSTALLED PRIOR TO INITIATION OF DEMOLITION ACTIVITIES. REFER TO EROSION & SEDIMENTATION PLAN FOR DETAILS.

9. ASBESTOS OR HAZARDOUS MATERIALS, IF FOUND ON SITE, SHALL BE REMOVED BY A LICENSED HAZARDOUS MATERIALS CONTRACTOR. CONTRACTOR SHALL NOTIFY OWNER IMMEDIATELY IF HAZARDOUS MATERIALS ARE ENCOUNTERED.

10. CONTRACTOR SHALL PROTECT ALL CORNER PINS, MONUMENTS, PROPERTY CORNERS, AND BENCHMARKS DURING DEMOLITION ACTIVITIES. IF DISTURBED, CONTRACTOR SHALL HAVE DISTURBED ITEMS RESET BY A LICENSED SURVEYOR AT NO ADDITIONAL COST TO THE OWNER.

11. CONTRACTOR SHALL ADHERE TO ALL LOCAL, STATE, FEDERAL, AND OSHA REGULATIONS WHEN OPERATING DEMOLITION EQUIPMENT AROUND UTILITIES.

12. CONTRACTOR SHALL PROVIDE AND MAINTAIN TRAFFIC CONTROL MEASURES IN ACCORDANCE WITH NCDOT & CITY OF WILMINGTON PUBLIC SERVICES DEPARTMENT STANDARDS, AND AS REQUIRED BY LOCAL AGENCIES WHEN WORKING IN AND/OR ALONG STREETS, ROADS, HIGHWAYS, ETC. IT SHALL BE THE CONTRACTOR'S RESPONSIBILITY TO OBTAIN APPROVAL AND COORDINATE WITH LOCAL AND/OR STATE AGENCIES REGARDING THE NEED, EXTENT, AND LIMITATIONS ASSOCIATED WITH INSTALLING AND MAINTAINING TRAFFIC CONTROL MEASURES.

13. CONTRACTOR SHALL PROTECT AT ALL TIMES ADJACENT STRUCTURES AND ITEMS FROM DAMAGE DUE TO DEMOLITION ACTIVITIES.

14. DEMOLITION CONTRACTOR SHALL COORDINATE EXISTING FACILITIES UTILITY DISCONNECTS WITH THE OWNER'S CONSTRUCTION REPRESENTATIVE A MINIMUM 7 DAYS PRIOR TO ANTICIPATED DEMOLITION OF STRUCTURES.

15. CONTRACTOR SHALL REFER TO OTHER PLANS WITHIN THIS CONSTRUCTION SET FOR OTHER PERTINENT INFORMATION.

ADDITIONAL UTILIZES ARE ANTICIPATED TO BE PRESENT ONSITE. CONTRACTOR SHALL COORDINATE WITH ALL AFFECTED UTILITY COMPANIES & REMOVE/ABANDON SERVICES, AS REQUIRED.

EXISTING WATER METERS TO BE ABANDONED AND WATER SERVICES TO BE ABANDONED TO THE MAIN, COORDINATE WITH CFPUA

SEWER SERVICES NOT USED TO BE PROPERLY ABANDONED

DEMOLITION PLAN

SCALE 1" = 20'

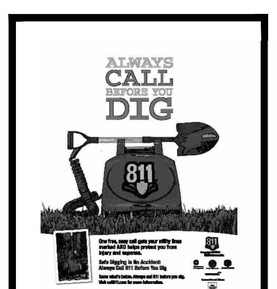

EVERY DIGGING JOB REQUIRES A CALL – EVEN SMALL PROJECTS LIKE PLANTING TREES OR SHRUBS. IF YOU HIT AN UNDERGROUND UTILITY LINE WHILE DIGGING, YOU CAN HARM YOURSELF OR THOSE AROUND YOU, DISRUPT SERVICE TO AN ENTIRE NEIGHBORHOOD AND POTENTIALLY BE RESPONSIBLE FOR FINES AND REPAIR COSTS.

SMART DIGGING MEANS CALLING 811 BEFORE EACH JOB. WHETHER YOU ARE A HOMEOWNER OR A PROFESSIONAL EXCAVATOR, ONE CALL TO 811 GETS YOUR UNDERGROUND UTILITY LINES MARKED FOR FREE.

Approved Construction Plan

	Name	Date
Planning		
Traffic		
Fire		

REVISIONS	BY

FREELAND and KAUFFMAN, INC.
Engineers * Landscape Architects
209 West Stone Avenue
Greenville, South Carolina 29609
864-233-5497

PRELIMINARY NOT FOR CONSTRUCTION

AAA CAR WASH
WILMINGTON, NC
MPV PROPERTIES
2400 SOUTH BOULEVARD, #300
CHARLOTTE, NC 28203
(704)-248-2100

DRAWN	AJW
CHECKED	BTS
DATE	6/17/2019
SCALE	AS NOTED
DRAWING	3

SITE LEGEND

EXISTING	PROPOSED	DESCRIPTION
3	3	NUMBER OF SPACES PER ROW
		CURB & GUTTER
		SIGN
		HANDICAP SYMBOL
		CONCRETE

BICYCLE PARKING

	REQUIRED PARKING	PARKING PROVIDED
BICYCLE PARKING	5	6

SOUTH COLLEGE ROAD IS A 45 MPH ROADWAY

SEE DRIVEWAY PLAN SHEET 5 FOR ADJACENT DRIVEWAYS & DRIVEWAYS ACROSS STREET, LANE CONFIGURATIONS, AND TRAFFIC CONTROL DEVICES

SITE LEGEND

- (A) PROPOSED 24" MOUNTABLE CURB & GUTTER, SEE DETAILS
- (B) ACCESSIBLE PARKING SPACE, TYPICAL. SEE DETAIL SHEET FOR ACCESSIBLE SPACE SIGN AND SYMBOL. "VAN" INDICATES VAN ACCESSIBLE SPACE.
- (C) PAINTED DIRECTIONAL ARROW, SEE DETAILS
- (D) STRIPED ISLAND, 4" SINGLE WHITE LINES @ 45° & 2' O.C.
- (E) CONCRETE SIDEWALK
- (F) STOP BAR & SIGN, SEE DETAILS
- (G) ADA RAMP
- (H) SITE SIGN
- (I) PRECAST CONCRETE TRANSFORMER PAD, COORD. WITH DUKE ENERGY
- (J) CROSS WALK, SEE DETAILS
- (K) END CURB & GUTTER WITH 8.0% MAX VERTICAL TAPER
- (L) VACUUM EQUIPMENT (RE: ARCH)
- (M) STRIPED ISLAND, 4" SINGLE YELLOW LINES @ 45° & 2' O.C.
- (N) FLAG POLE (COORD. WITH OWNER)
- (O) CAMERA STANCHION (RE: ARCH)
- (P) TIE TO EXISTING SIDEWALK
- (Q) TIE TO EXISTING CURB & GUTTER
- (R) EXISTING SIDEWALK
- (S) 2' CONCRETE CURB BACKING
- (T) CONCRETE WHEELSTOP
- (U) DETECTABLE WARNING PER CITY OF WILMINGTON DETAIL SD3-08 (SEE DETAIL)
- (V) ENTRY MANAGEMENT SIGN
- (W) ENTRY MANAGEMENT PEDESTAL
- (X) PAY STATION ISLAND (RE: DETAIL)

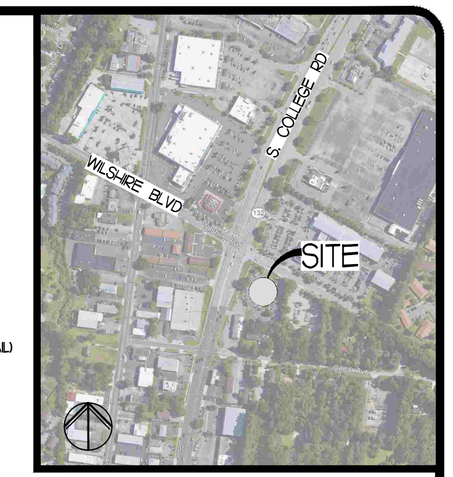

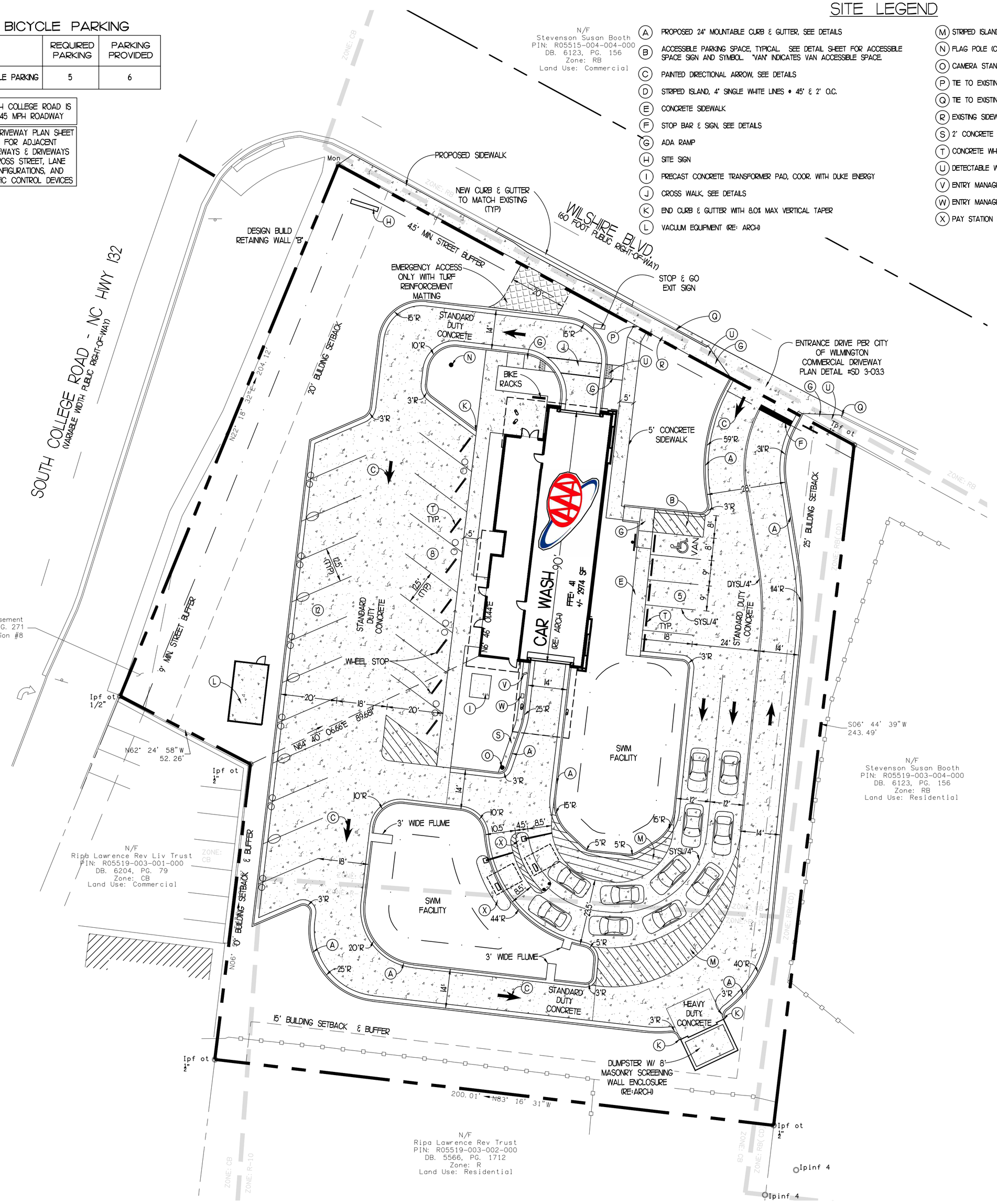

SITE PLAN NOTES

1. CONTRACTOR SHALL REFER TO THE AAA CAR CARE CENTER ARCHITECTURAL PLANS FOR THE EXACT LOCATION OF UTILITY ENTRANCES, BUILDING DIMENSIONS, ROOF LEADERS, EXIT DOORS, EXIT RAMPS AND PORCHES.
2. ALL DIMENSIONS ARE TO BUILDING FACE, FACE OF CURB, EDGE OF ASPHALT OR EDGE OF SIDEWALK UNLESS NOTED OTHERWISE.
3. CONTRACTOR SHALL PROVIDE ALL LABOR AND MATERIALS FOR THE INSTALLATION OF TRAFFIC SIGNAGE AND PAVEMENT MARKINGS AS SHOWN ON THE CONSTRUCTION PLANS.
4. ALL NON-LANDSCAPED ISLANDS SHALL BE PAINTED WITH STRIPES 4" WIDE, AT 45° AND 2 FEET O.C.
5. ALL STRIPING SHALL BE 4" WIDE UNLESS NOTED OTHERWISE.
6. CONTRACTOR SHALL COORDINATE FINAL LOCATION OF THE SITE SIGN WITH AAA.
7. CONTRACTOR SHALL REFER TO OTHER PLANS WITHIN THIS CONSTRUCTION SET FOR OTHER PERTINENT INFORMATION.
8. ALL WORK AND MATERIALS SHALL COMPLY WITH ALL CITY OF WILMINGTON REGULATIONS AND CODES AND O.S.H.A. STANDARDS.
9. ALL DISTURBED AREAS ARE TO RECEIVE FOUR INCHES OF TOPSOIL, SEED, MULCH AND WATER UNTIL A HEALTHY STAND OF GRASS IS ESTABLISHED.
10. CONTRACTOR IS RESPONSIBLE FOR OBTAINING APPROVAL FROM ALL AFFECTED UTILITY COMPANIES FOR THE LOCATION AND HEIGHT OF ALL SIGNAGE BEFORE CONDUIT AND WIRING IS INSTALLED.
11. EXISTING STRUCTURES WITHIN CONSTRUCTION LIMITS ARE TO BE ABANDONED, REMOVED OR RELOCATED AS NECESSARY. ALL COST SHALL BE INCLUDED IN BASE BID.
12. CONTRACTOR SHALL BE RESPONSIBLE FOR ALL RELOCATIONS, INCLUDING BUT NOT LIMITED TO, ALL UTILITIES, STORM DRAINAGE, SIGNS, TRAFFIC SIGNALS & POLES, ETC. AS REQUIRED. ALL WORK SHALL BE IN ACCORDANCE WITH GOVERNING AUTHORITIES SPECIFICATIONS AND SHALL BE APPROVED BY SUCH. ALL COST SHALL BE INCLUDED IN BASE BID.
13. SITE BOUNDARY, TOPOGRAPHY, UTILITY AND ROAD INFORMATION TAKEN FROM A SURVEY BY SURVEY MATTERS.

PARKING CALCULATIONS

TENANT	AREA SF	REQUIRED RATIO	REQUIRED PARKING	PARKING PROVIDED
AUTOMOTIVE SERVICES	2,974 SF±	MAX: 1 / 400 SF MIN: 1 / 600 SF *#2000 SF DISPLAY AREA	5-8	5

SITE CONTAINS 20 VACUUM STATIONS. VACUUM STATIONS WERE NOT USED TO DETERMINE MINIMUM AND MAXIMUM PARKING FOR ZONING PURPOSES.

PAINT STRIPING LEGEND

SYSL/4" - SINGLE YELLOW SOLID LINE / 4" WIDE
DYSL/4" - DOUBLE YELLOW SOLID LINE / 4" WIDE EACH

CITY OF WILMINGTON PLAN NOTES

1. ALL PAVEMENT MARKINGS IN PUBLIC RIGHT-OF-WAYS AND FOR DRIVEWAYS ARE TO BE THERMOPLASTIC AND MEET CITY AND/OR NCDOT STANDARDS.
2. ONCE STREETS ARE OPEN TO TRAFFIC, CONTACT TRAFFIC ENGINEERING REGARDING THE INSTALLATION OF TRAFFIC AND STREET NAME SIGNS. PROPOSED STREET NAMES MUST BE APPROVED PRIOR TO INSTALLATION OF STREET NAME SIGNS.
3. TRAFFIC CONTROL DEVICES (INCLUDING SIGNS AND PAVEMENT MARKINGS) IN AREAS OPEN TO PUBLIC TRAFFIC ARE TO MEET MUTCH (MANUAL ON UNIFORM TRAFFIC CONTROL DEVICES) STANDARDS.
4. CONTACT TRAFFIC ENGINEERING AT 910-341-7888 TO ENSURE THAT ALL TRAFFIC SIGNAL FACILITIES AND EQUIPMENT ARE SHOWN ON THE PLAN.
5. TRAFFIC ENGINEERING MUST APPROVE OF PAVEMENT MARKING PRIOR TO ACTUAL STRIPING.
6. ALL PARKING STALL MARKINGS AND LANE ARROWS WITHIN THE PARKING AREAS SHALL BE WHITE.
7. ALL TRAFFIC CONTROL SIGNS AND MARKINGS OFF THE RIGHT-OF-WAY ARE TO BE MAINTAINED BY THE PROPERTY OWNER.
8. STOP SIGNS AND STREET SIGNS TO REMAIN IN PLACE DURING CONSTRUCTION.
9. TACTILE WARNING MATS WILL BE INSTALLED ON ALL WHEELCHAIR RAMPS.
10. A UTILITY CUT PERMIT IS REQUIRED FOR EACH OPEN CUT OF A CITY STREET.
11. ANY BROKEN OR MISSING SIDEWALK PANELS, DRIVEWAY PANELS AND CURBING WILL BE REPLACED.
12. CONTACT TRAFFIC ENGINEERING AT 910-341-7888 TO DISCUSS STREET LIGHTING OPTIONS.
13. CONTRACTOR SHALL MAINTAIN ALL-WEATHER ACCESS FOR EMERGENCY VEHICLES AT ALL TIMES DURING CONSTRUCTION.
14. NO OBSTRUCTIONS ARE PERMITTED IN THE SPACE BETWEEN THIRTY (30) INCHES AND TEN (10) FEET ABOVE THE GROUND WITHIN THE TRIANGULAR SIGHT DISTANCE.

CITY OF WILMINGTON AUTOMOTIVE SERVICES NOTES

1. ALL REPAIR WORK OR LUBRICATION SHALL BE CONDUCTED WITHIN THE PRINCIPAL BUILDING. ALL PERMANENT STORAGE OF MATERIALS, MERCHANDISE, OR REPAIR AND SERVICING EQUIPMENT SHALL BE CONTAINED WITHIN THE PRINCIPAL BUILDING.
2. NO OPERATOR SHALL PERMIT THE STORAGE OF MOTOR VEHICLES FOR A PERIOD IN EXCESS OF TWENTY-FOUR (24) HOURS UNLESS THE VEHICLES ARE ENCLOSED IN THE PRINCIPAL BUILDING.
3. SERVICE OR CUSTOMER VEHICLES SHALL BE PARKED ON THE PREMISES IN A MANNER THAT WILL NOT CREATE TRAFFIC HAZARDS OR INTERFERE WITH THE VEHICULAR MANEUVERING AREA NECESSARY TO ENTER OR EXIT THE SITE.
4. THE PREMISES SHALL NOT BE USED FOR THE SALE OF VEHICLES.
5. NO OUTDOOR WORK SHALL BE PERFORMED EXCEPT IN AREAS DESIGNATED FOR SUCH ACTIVITY ON AN APPROVED SITE PLAN.
6. OUTDOOR WORK AREAS SHALL BE FENCED, WALLED OR SCREENED TO MINIMIZED ON-SITE AND OFF-SITE NOISE, GLARE, ODOR OR OTHER IMPACTS.
7. ADDITIONAL BUFFERING AND SCREENING MAY BE REQUIRED WHERE SUCH USE IS LOCATED IN CLOSE PROXIMITY TO RESIDENTIAL OR RETAIL COMMERCIAL USES.

SITE FIRE & LIFE SAFETY NOTES

1. CONTRACTOR SHALL MAINTAIN AN ALL-WEATHER ACCESS FOR EMERGENCY VEHICLES AT ALL TIMES DURING CONSTRUCTION.
2. NEW HYDRANTS MUST BE BROUGHT INTO SERVICE PRIOR TO COMBUSTIBLE MATERIALS DELIVERED TO THE JOB SITE.
3. LANDSCAPING OR PARKING CANNOT BLOCK OR IMPEDE THE FDC OR FIRE HYDRANTS. A 3' CLEAR SPACE SHALL BE MAINTAINED AROUND THE CIRCUMFERENCE OF THE HYDRANT AND FDC.
4. ADDITIONAL FIRE PROTECTION AND ACCESSIBILITY REQUIREMENTS MAY BE REQUIRED DUE TO ANY SPECIAL CIRCUMSTANCES CONCERNING THE PROJECT.

EVERY DIGGING JOB REQUIRES A CALL - EVEN SMALL PROJECTS LIKE PLANTING TREES OR SHRUBS. IF YOU DIG INTO AN UNDERGROUND UTILITY LINE, IT COULD CAUSE YOU OR YOUR NEIGHBORS OR THOSE AROUND YOU, DISRUPT SERVICE TO AN ENTIRE NEIGHBORHOOD AND POTENTIALLY BE RESPONSIBLE FOR FINES AND REPAIR COSTS.

SMART DIGGING MEANS CALLING 811 BEFORE EACH JOB. WHETHER YOU ARE A HOMEOWNER OR A PROFESSIONAL EXCAVATOR, ONE CALL TO 811 GETS YOUR UNDERGROUND UTILITY LINES MARKED FOR FREE.

Approved Construction Plan

	Name	Date
Planning		
Traffic		
Fire		

SITE PLAN

SCALE 1" = 20'

REVISIONS	BY

FREELAND and KAUFFMAN, INC.
Engineers * Landscape Architects
209 West Stone Avenue
Greenville, South Carolina 29609
864-233-5497

PRELIMINARY NOT FOR CONSTRUCTION

AAA CAR WASH
WILMINGTON, NC
MPV PROPERTIES
2400 SOUTH BOULEVARD, #300
CHARLOTTE, NC 28203
(704)-248-2100

DRAWN	AJW
CHECKED	BTS
DATE	6/17/2019
SCALE	AS NOTED
DRAWING	4

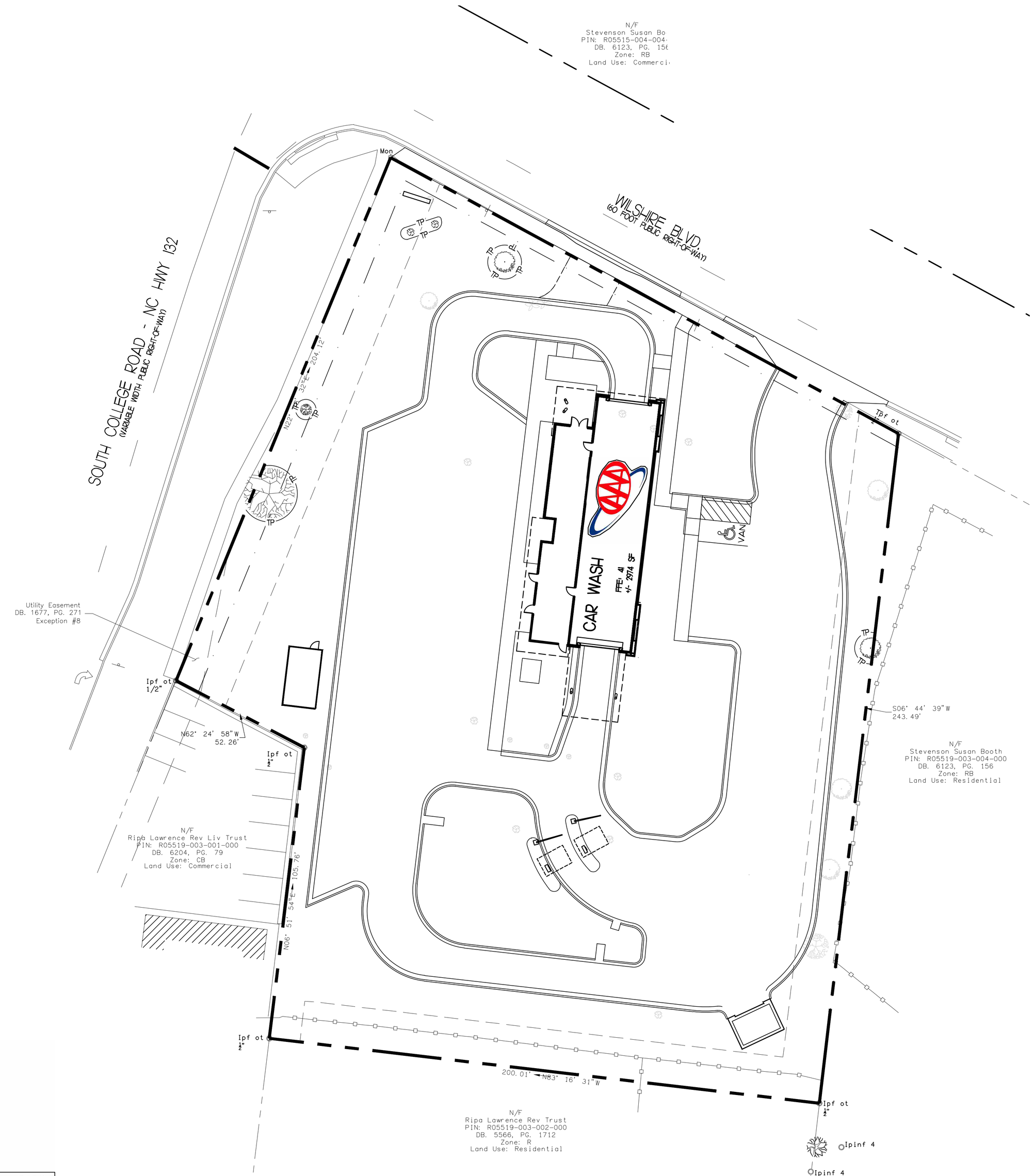

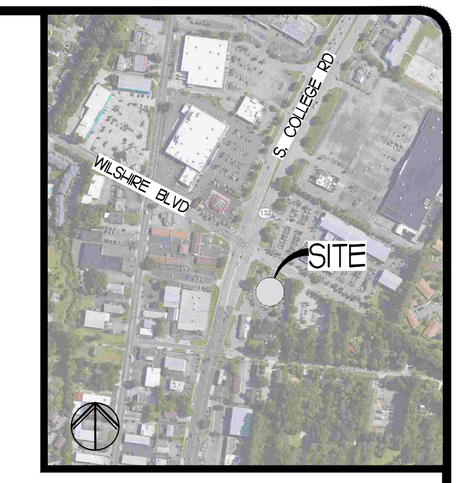

REVISIONS	BY

FREELAND and KAUFFMAN, INC.
Engineers * Landscape Architects
209 West Stone Avenue
Greenville, South Carolina 29609
864-233-5497

PRELIMINARY
NOT FOR
CONSTRUCTION

AAA CAR WASH
WILMINGTON, NC
MPV PROPERTIES
2400 SOUTH BOULEVARD #300
CHARLOTTE, NC 28203
(704)-248-2100

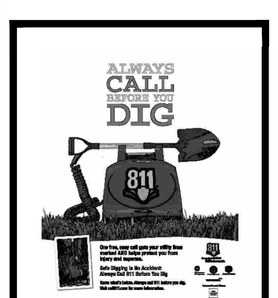

EVERY DIGGING JOB REQUIRES A CALL – EVEN SMALL PROJECTS LIKE PLANTING TREES OR SHRUBS. IF YOU HIT AN UNDERGROUND UTILITY LINE WHILE DIGGING, YOU CAN HARM YOURSELF OR THOSE AROUND YOU, DISRUPT SERVICE TO AN ENTIRE NEIGHBORHOOD AND POTENTIALLY BE RESPONSIBLE FOR FINES AND REPAIR COSTS.

SMART DIGGING MEANS CALLING 811 BEFORE EACH JOB. WHETHER YOU ARE A HOMEOWNER OR A PROFESSIONAL EXCAVATOR, ONE CALL TO 811 GETS YOUR UNDERGROUND UTILITY LINES MARKED FOR FREE.

Approved Construction Plan

	Name	Date
Planning		
Traffic		
Fire		

TREE REMOVAL SITE OVERLAY

0 30 40
SCALE 1" = 20'

DRAWN	AJW
CHECKED	BTS
DATE	6/17/2019
SCALE	AS NOTED
DRAWING	5

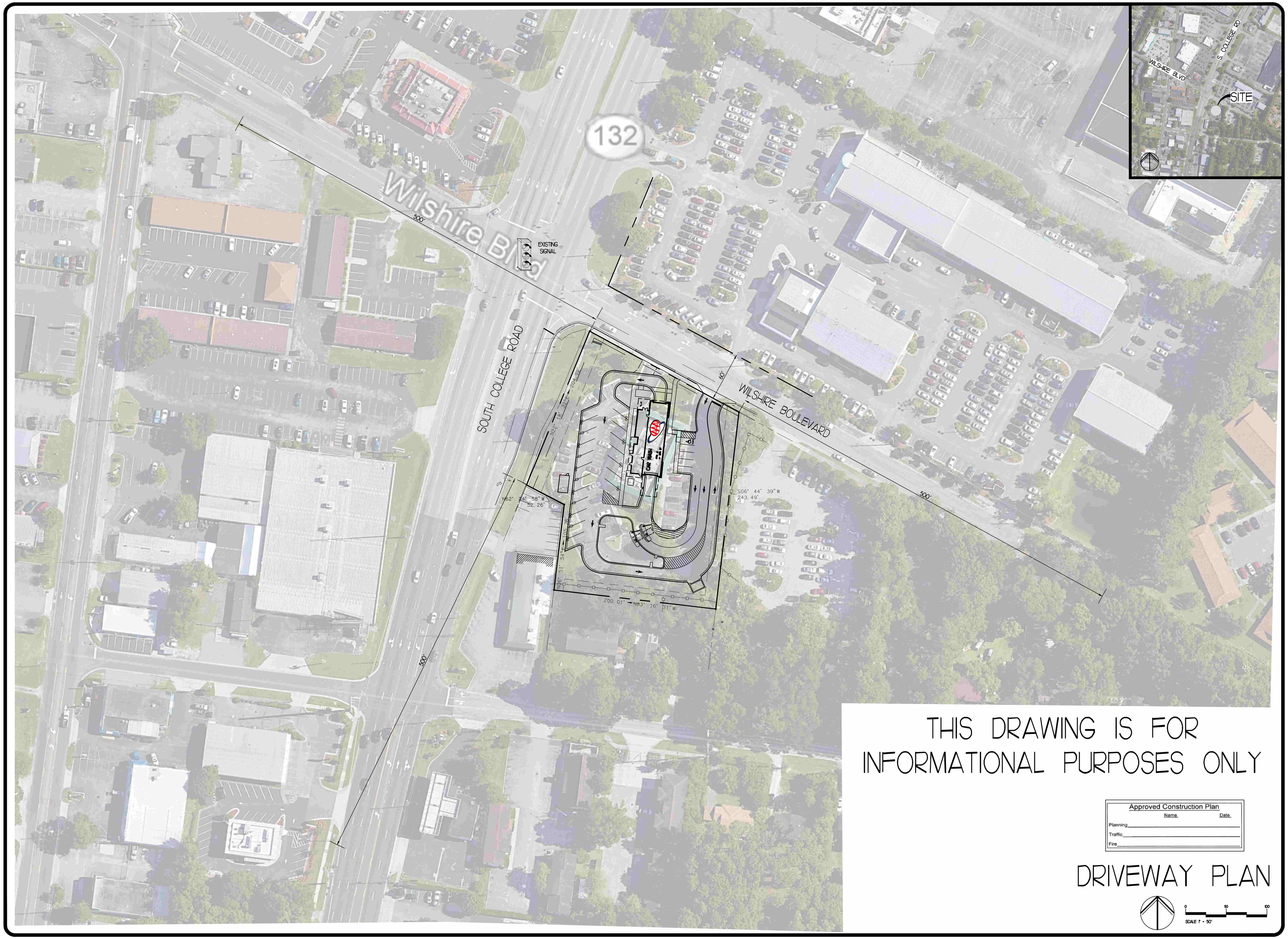

THIS DRAWING IS FOR INFORMATIONAL PURPOSES ONLY

Approved Construction Plan

	Name	Date
Planning		
Traffic		
Fire		

DRIVEWAY PLAN

SCALE 1" = 50'

REVISIONS	BY

FREELAND and KAUFFMAN, INC.
Engineers * Landscape Architects
209 West Stone Avenue
Greenville, South Carolina 29609
864-233-5497

PRELIMINARY NOT FOR CONSTRUCTION

AAA CAR WASH
WILMINGTON, NC
MPV PROPERTIES
2400 SOUTH BOULEVARD, #300
CHARLOTTE, NC 28203
(704)-248-2100

DRAWN	AJW
CHECKED	BTS
DATE	6/17/2019
SCALE	AS NOTED
DRAWING	6

Hoop Rack Heavy Duty

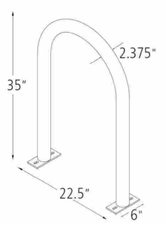

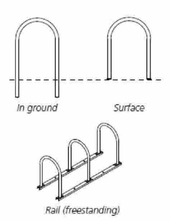

Product	Hoop Rack Heavy Duty
Capacity	2 Bikes
Materials	2" schedule 40 pipe (2.375" OD)
Finishes	An after fabrication hot dipped galvanized finish is our standard option. 250 TGIC powder coat colors, thermoplastic coating, PVC dip, and stainless steel finishes are also available as alternate options. Our powder coat finish assures a high level of adhesion and durability by following these steps: 1. Sandblast 2. Epoxy primer electrostatically applied 3. Final thick TGIC polyester powder coat Stainless Steel: 304 grade stainless steel material finished in either a high polished shine or a satin finish.
Installation Methods	**In ground mount** is embedded into concrete base. Specify in ground mount for this option. **Foot Mount** has two 2.5"x6"x.25" feet with two anchors per foot. Specify foot mount for this option. **Rail Mounted** Hoops are bolted to two parallel rails which can be left freestanding or anchored to the ground. Rails are heavy duty 3"x1.4"x3/16" thick galvanized mounting rails. Specify rail mount for this option.
Space Use & Setbacks	**Wall Setbacks:** For racks set parallel to a wall: Minimum: 24" Recommended: 36" **For racks set perpendicular to a wall:** Minimum: 28" Recommended: 42" **Distance Between Racks:** Minimum: 24" Recommended: 36" **Street Setbacks:** Minimum: 24" Recommended: 36"

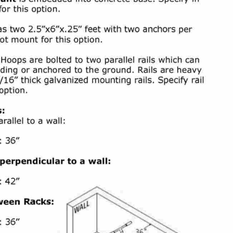

American Bicycle Security Company
P.O. Box 7359
Ventura, CA 93006
Ph: (800) 245-3723 or (805) 933-3688
Fax: (805) 933-1865
www.ameribike.com
Email: turtle@ameribike.com

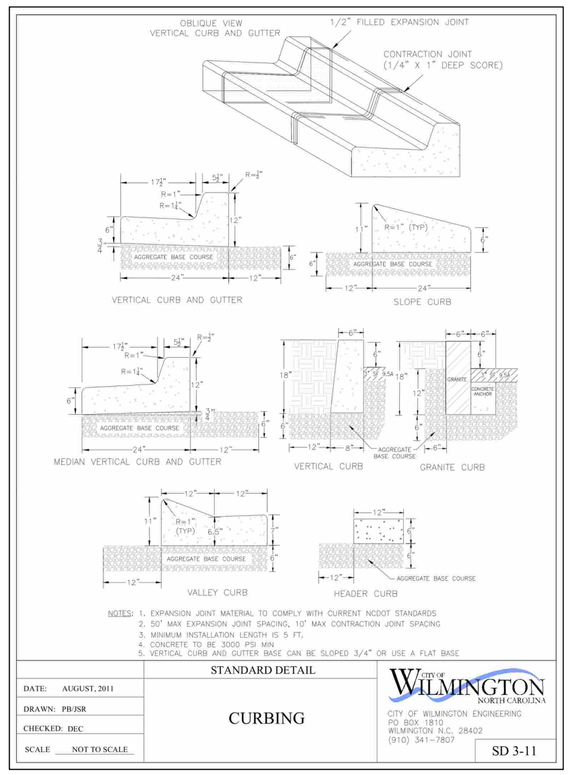

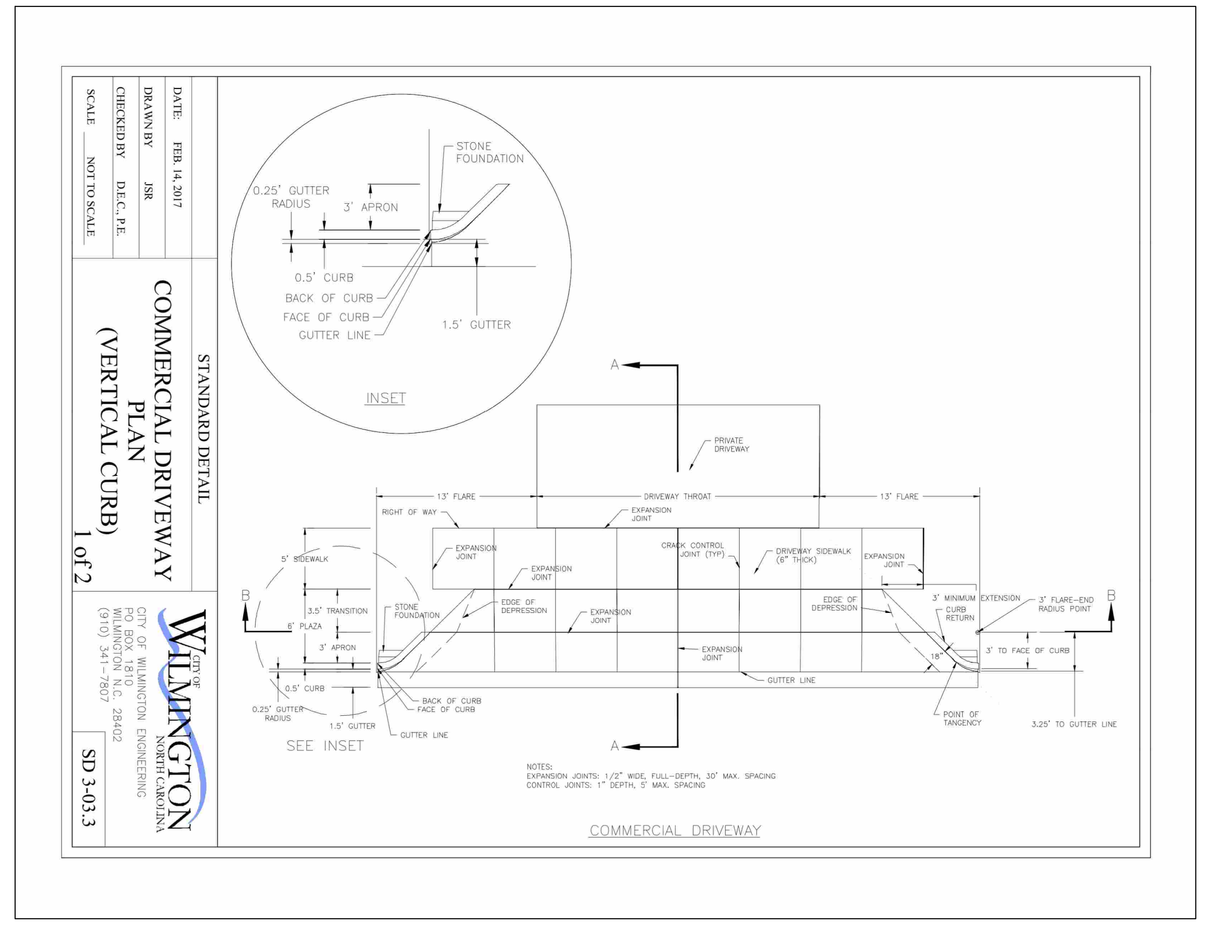

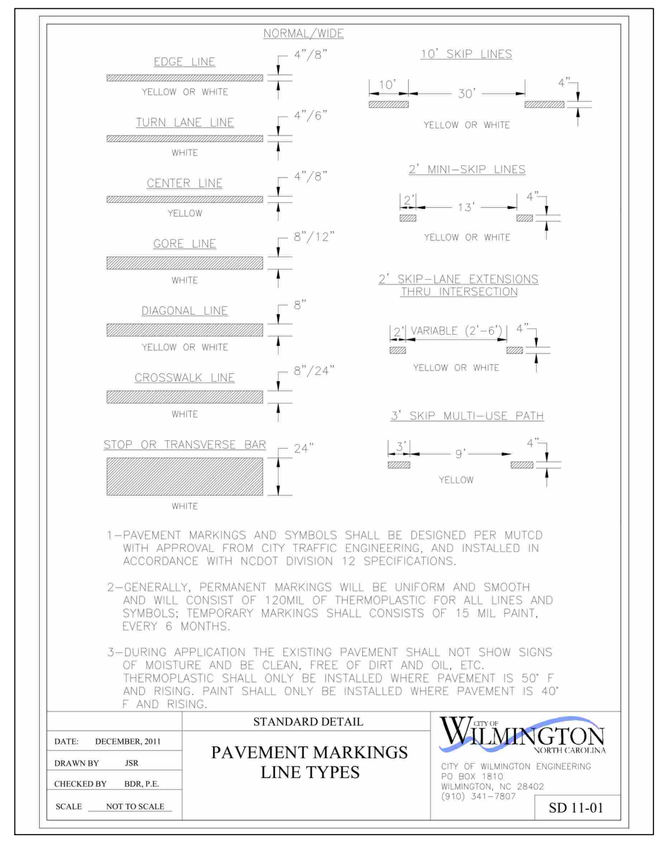

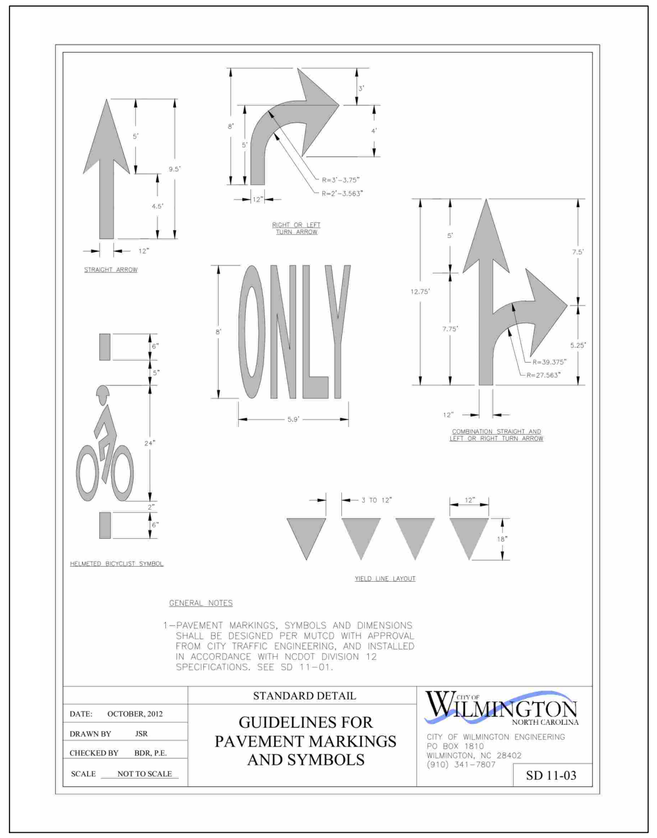

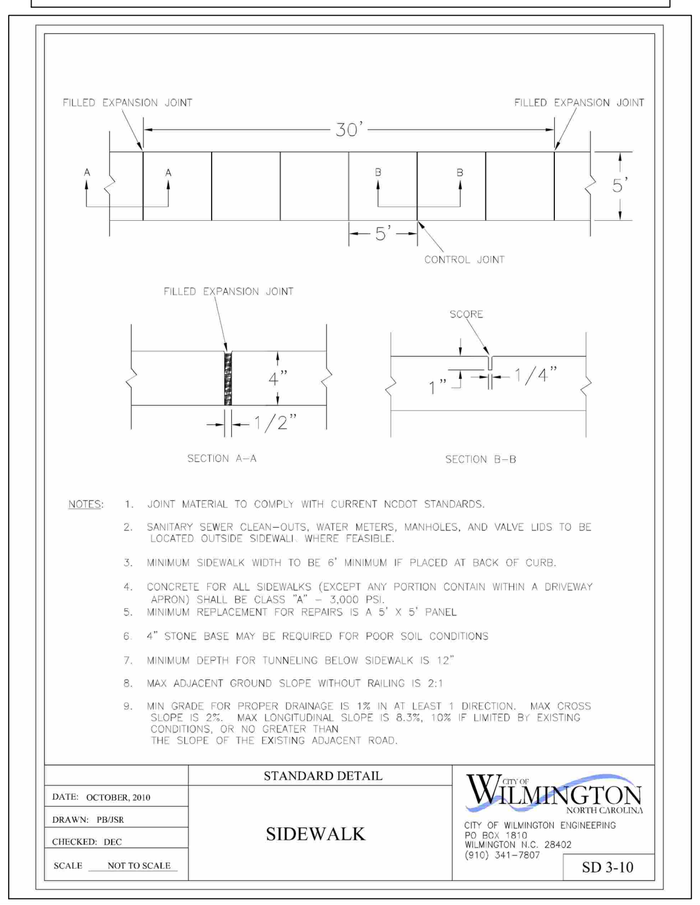

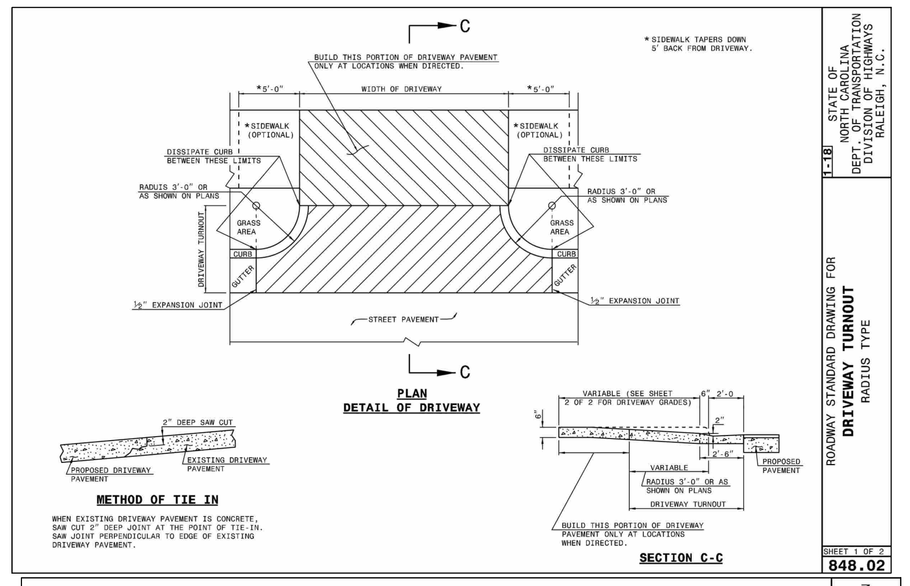

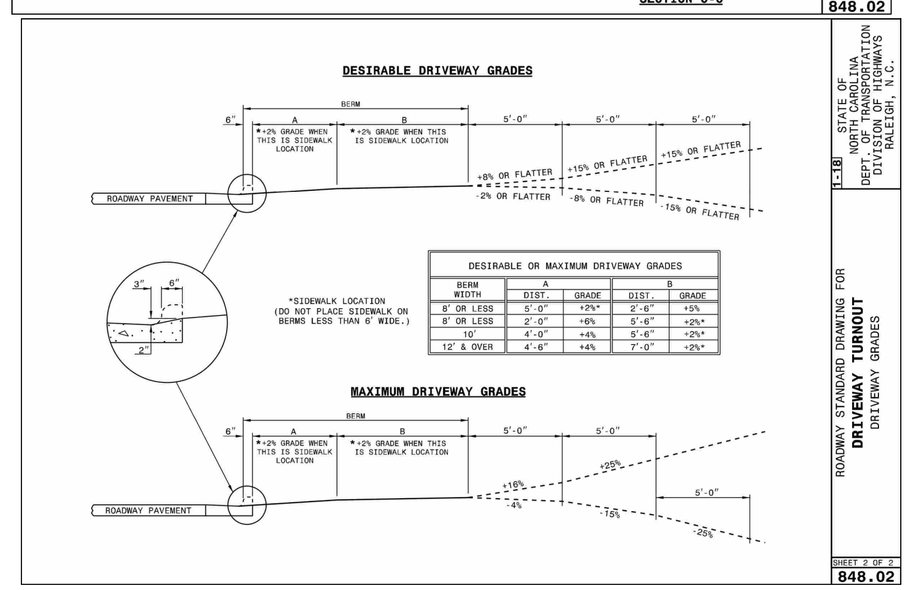

DESIRABLE OR MAXIMUM DRIVEWAY GRADES				
BERM WIDTH	A		B	
	DIST.	GRADE	DIST.	GRADE
8' OR LESS	5'-0"	+2%*	2'-6"	+5%
8' OR LESS	2'-0"	+6%	5'-6"	+2%
10'	4'-0"	+4%	5'-6"	+2%
12' & OVER	4'-6"	+4%	7'-0"	+2%

REVISIONS	BY

FREELAND and KAUFFMAN, INC.
Engineers * Landscape Architects
209 West Stone Avenue
Greenville, South Carolina 29609
864-233-5497

PRELIMINARY NOT FOR CONSTRUCTION

AAA CAR WASH
WILMINGTON, NC
MPV PROPERTIES
2400 SOUTH BOULEVARD, #300
CHARLOTTE, NC 28203
(704)-248-2100

Approved Construction Plan

	Name	Date
Planning		
Traffic		
Fire		

SITE DETAILS
1 OF 2

DRAWN	AJW
CHECKED	BTS
DATE	6/17/2019
SCALE	AS NOTED
DRAWING	7

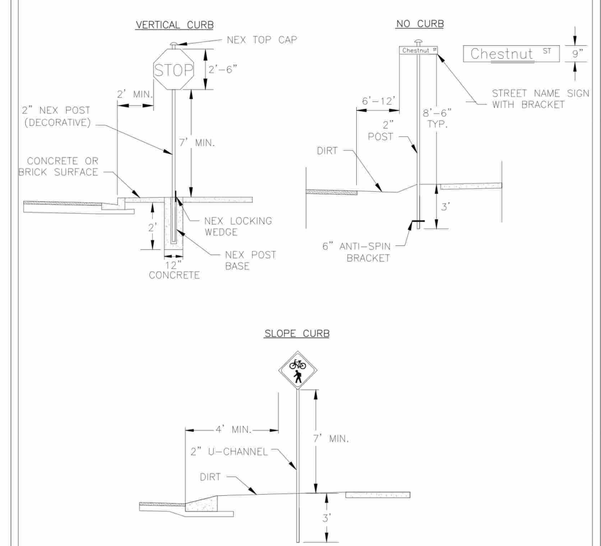

*DETAILS SHOW VARIOUS TYPES AND LOCATION, BUT NOT ALL COMBINATIONS.

DATE: NOVEMBER, 2011	STANDARD DETAIL	CITY OF WILMINGTON NORTH CAROLINA
DRAWN BY JSR	STREET SIGNS AND LOCATION	CITY OF WILMINGTON ENGINEERING PO BOX 1810 WILMINGTON, NC 28402 (910) 341-7807
CHECKED BY BDR, P.E.		
SCALE NOT TO SCALE	SHEET 1 of 2	SD 15-03

SIGNS

1. All signs shall meet the requirements of MUTCD and City Traffic Engineering in effect at the time of construction.

2. All Traffic Control Signs including multi-use paths shall be fabricated with 0.080 inch aluminum blanks using high intensity prismatic reflective sheeting Type IV or better. STOP signs shall be a minimum of 30"x30".

3. SPECIAL DESIGNATION signs by location and type shall adhere to City of Wilmington signage plan (ie. downtown, historic, cross-city trail, parks, riverfront, scenic by-way, parking, etc.) and all associated policies.

4. POST MOUNTED STREET NAME SIGNS shall be fabricated with 9" extruded aluminum street name sign blanks using a standard cut-out. Minimum sign length is 18" long and increasing in 6" increments to 54" maximum as dictated by the number of letters in the name. The color scheme shall be white letters on a green background without a border. Generally, in the downtown and historic areas or as designated in the City of Wilmington signage plan the background shall be blue and contain a topper.

5. Decorative sign posts shall consist of the NEX sign support system, 2" octagonal tube, 14 gauge, powder coated glossy black and include cap, post, base and wedge.

6. All other sign posts shall be u-channel posts made of galvanized steel with 8' posts 2lbs/ft or 12' posts 3lbs/ft. Galvanized NEX post may be substituted with approval from the City Signs and Markings Engineer.

7. OVERHEAD STREET NAME SIGNS shall be fabricated with 0.080 inch aluminum flat sign blanks 18" in height using a standard cut-out. Sign length will be dictated by the number of letters in the name. For mast-arm type traffic signal supports and other overhead support systems refer to the design plans for maximum sign length.

8. All sign lettering, colors and fonts shall adhere to the MUTCD in effect at the time of construction. Florescent Yellow-Green shall be used on signs, in place of Yellow, when listed as an optional color in the MUTCD. Generally, the font will be FHWA series fonts (Highway Gothic.) Other font types require prior City Signs and Markings Engineer approval .

LOCATION

9. Sign locations depend on the edge of road condition. Generally, signs shall be a minimum 2' from face of a vertical curb, 4' from front of slope face curb, and 6' from edge of pavement without curb. Signs shall not be located more than 12' from any of these locations.

10. Sign posts installed in dirt shall be buried a minimum of 36". Octagonal posts shall utilize an anti-spin device, 6" in length minimum. Sign posts installed in concrete or brick shall utilize a base cast in concrete 24" x 12" diameter.

11. Street name signs shall be installed 8'-6" from the ground to the bottom of the sign. Street name signs co-located with STOP signs shall be installed above the STOP sign. A 6" space shall be maintained between the STOP sign and a Street name sign that is parallel to the STOP sign face. All other signs should be mounted per MUTCD guidelines for Urban Areas.

DATE: NOVEMBER, 2011	STANDARD DETAIL	CITY OF WILMINGTON NORTH CAROLINA
DRAWN BY JSR	STREET SIGNS AND LOCATION	CITY OF WILMINGTON ENGINEERING PO BOX 1810 WILMINGTON, NC 28402 (910) 341-7807
CHECKED BY BDR, P.E.		
SCALE NOT TO SCALE	SHEET 2 of 2	SD 15-03

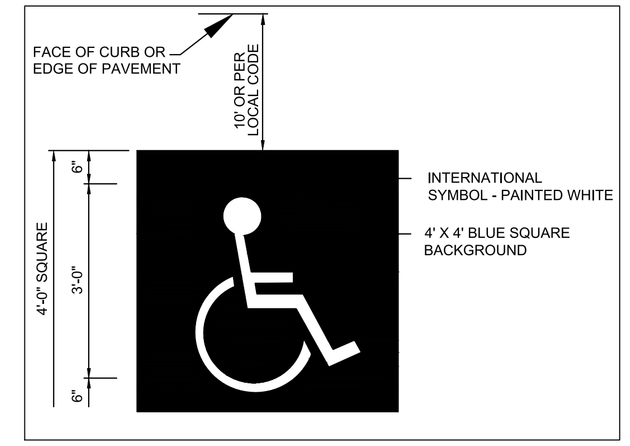

HC PARKING GROUND PAINTING

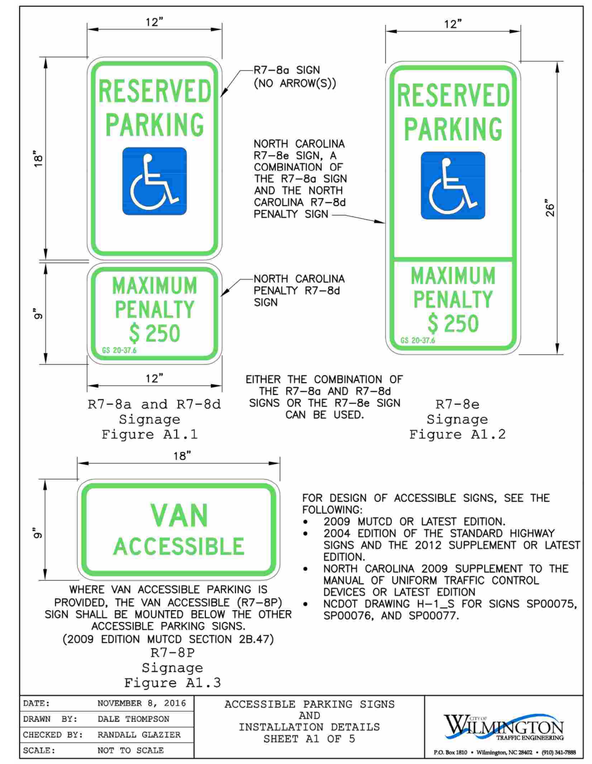

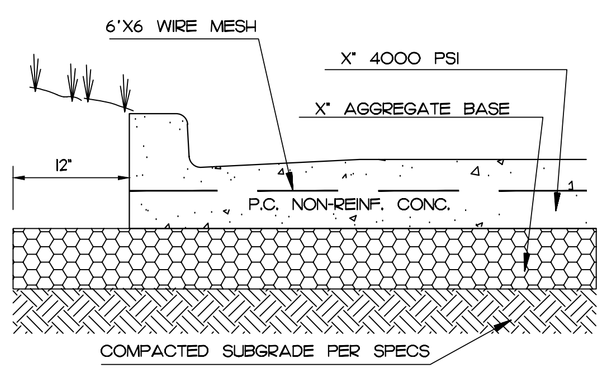

STANDARD DUTY PC CONCRETE PAVING

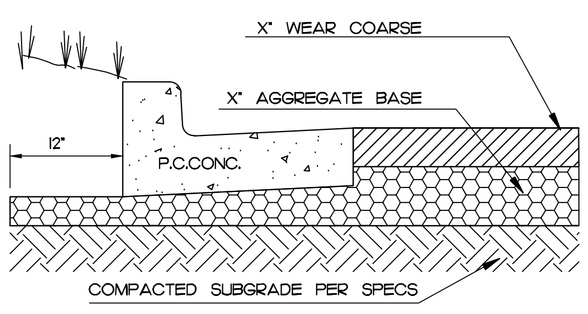

HEAVY DUTY ASPHALT PAVING

NOTE: PAVEMENT DESIGN PROVIDED BY ECS SOUTHEAST, LLP. FREELAND & KAUFFMAN, INC. ASSUMES NO RESPONSIBILITY OR LIABILITY FOR DESIGN.

PAVING DETAILS

N.T.S.

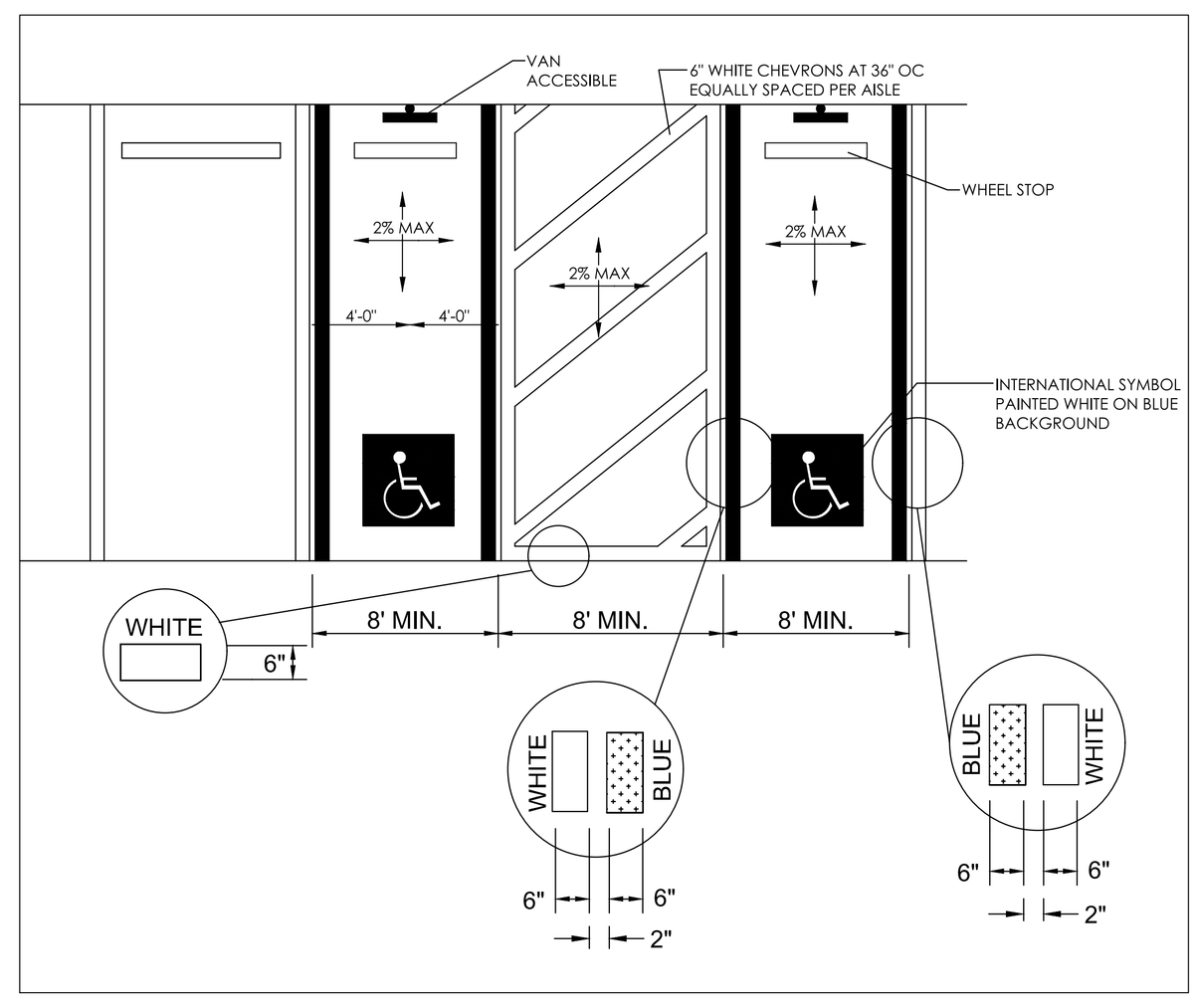

TYPICAL - HC PARKING PAINTING

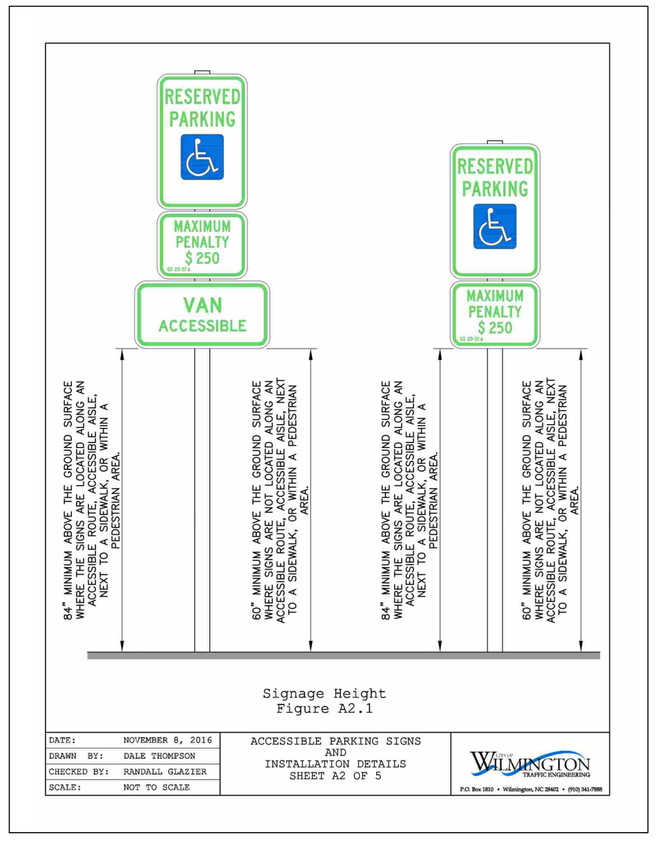

Approved Construction Plan

	Name	Date
Planning		
Traffic		
Fire		

SITE DETAILS 2 OF 2

REVISIONS	BY

FREELAND and KAUFFMAN, INC.
Engineers • Landscape Architects
209 West Stone Avenue
Greenville, South Carolina 29609
864-233-5497

PRELIMINARY NOT FOR CONSTRUCTION

AAA CAR WASH
WILMINGTON, NC
MPV PROPERTIES
2400 SOUTH BOULEVARD, #300
CHARLOTTE, NC 28203
(704)-248-2100

DRAWN	AJW
CHECKED	BTS
DATE	6/17/2019
SCALE	AS NOTED
DRAWING	8

SITE GRADING NOTES

1. ALL SITE WORK SHALL BE DONE IN ACCORDANCE WITH THE PLANS PREPARED BY FREELAND & KAUFFMAN, INC., THE CURRENT REQUIREMENTS OF THE CITY OF WILMINGTON, NORTH CAROLINA, THE APPLICABLE SECTIONS OF THE NCDOT STANDARD SPECIFICATIONS FOR ROADWAY CONSTRUCTION, AND ALL OTHER PERTINENT FEDERAL AND STATE LAWS.

2. THE CONTRACTOR SHALL COMPLY AT ALL TIMES WITH APPLICABLE FEDERAL, STATE AND LOCAL LAWS, PROVISIONS, AND POLICIES GOVERNING SAFETY AND HEALTH, INCLUDING THE FEDERAL CONSTRUCTION SAFETY ACT (PUBLIC LAW 91-54), FEDERAL REGISTER, CHAPTER XVII, PART 1926 OF TITLE 29 REGULATIONS, OCCUPATIONAL SAFETY AND HEALTH REGULATIONS FOR CONSTRUCTION, AND SUBSEQUENT PUBLICATIONS UPDATING THESE REGULATIONS.

3. THE CONTRACTOR SHALL BE RESPONSIBLE FOR EXAMINING THE AREAS AND CONDITIONS UNDER WHICH THE PROJECT IS TO BE CONSTRUCTED PRIOR TO THE SUBMISSION OF A BID. SUBMISSION OF A BID SHALL BE CONSTRUED TO MEAN THE CONTRACTOR HAS REVIEWED THE SITE AND IS FAMILIAR WITH CONDITIONS AND CONSTRAINTS OF THE SITE.

4. BEFORE EXCAVATION, ALL UNDERGROUND UTILITIES SHALL BE LOCATED IN THE FIELD BY THE PROPER AUTHORITIES. THE CONTRACTOR SHALL NOTIFY "CALL BEFORE YOU DIG" AT 811. THE LOCATION OF ALL UTILITES AND UNDERGROUND STRUCTURES ARE APPROXIMATE AND MAY NOT ALL BE SHOWN. IT IS THE RESPONSIBILITY OF THE CONTRACTOR TO DETERMINE THE EXISTENCE AND THE EXACT LOCATION OF ALL UTILITIES AND UNDERGROUND STRUCTURES.

5. ALL EXISTING TREES, VEGETATION, PAVEMENTS, CONCRETE FOUNDATIONS, STRUCTURES AND ORGANIC TOPSOIL SHALL BE STRIPPED AND REMOVED FROM NEW CONSTRUCTION AREAS UNLESS NOTED OTHERWISE.

6. ALL SLOPES SHALL BE 2:1 (HORIZONTAL:VERTICAL) MAXIMUM UNLESS NOTED OTHERWISE.

7. AN AS-BUILT DRAWING OF NEW UTILITY SERVICES MUST BE PREPARED BY THE CONTRACTOR AND SUBMITTED TO THE OWNER UPON COMPLETION OF THE PROJECT.

8. ALL AREAS NOT PAVED SHALL BE TOPSOILED, SEEDED AND MULCHED OR LANDSCAPED UNLESS OTHERWISE NOTED IN THE CONSTRUCTION DRAWINGS, SITE SPECIFICATIONS OR INSTRUCTED BY THE OWNER.

9. CONTRACTOR SHALL REFER TO THE GEOTECHNICAL REPORT, PREPARED BY OTHERS, PRIOR TO INITIATION OF ANY EARTHWORK ACTIVITY.

10. CONTRACTOR SHALL REFER TO OTHER PLANS WITHIN THIS CONSTRUCTION SET FOR OTHER PERTINENT INFORMATION.

11. IF ANY EXISTING STRUCTURES TO REMAIN ARE DAMAGED DURING CONSTRUCTION IT SHALL BE THE CONTRACTORS RESPONSIBILITY TO REPAIR AND/OR REPLACE THE EXISTING STRUCTURE AS NECESSARY TO RETURN IT TO EXISTING CONDITIONS OR BETTER.

12. CONTRACTOR SHALL ADJUST AND/OR CUT EXISTING PAVEMENT AS NECESSARY TO ASSURE A SMOOTH FIT AND CONTINUOUS GRADE.

13. CONTRACTOR SHALL ASSURE POSITIVE DRAINAGE AWAY FROM BUILDINGS FOR ALL NATURAL AND PAVED AREAS.

14. TOPOGRAPHIC INFORMATION TAKEN FROM A TOPOGRAPHIC SURVEY BY SURVEY MATTERS. IF CONTRACTOR DOES NOT ACCEPT EXISTING TOPOGRAPHY AS SHOWN ON THE PLANS, WITHOUT EXCEPTION, HE SHALL HAVE MADE, AT HIS EXPENSE, A TOPOGRAPHIC SURVEY BY A REGISTERED LAND SURVEYOR AND SUBMIT IT TO THE OWNER FOR REVIEW.

15. ALL SIDEWALKS TO HAVE MAXIMUM 2.00% CROSS SLOPE AND 5.00% MAX LONGITUDINAL SLOPE.

16. ALL SLOPES 3:1 AND STEEPER TO RECEIVE EROSION CONTROL MATTING.

17. CONTRACTOR SHALL MAINTAIN ALL GRASSED/LANDSCAPED AREAS SUCH THAT FINAL STABILIZATION IS ACHIEVED & A NOTICE OF TERMINATION CAN BE ACHIEVED.

CONTRACTOR TO POTHOLE UTILITIES PRIOR TO ORDERING ANY STORM DRAIN MATERIALS & NOTIFY OWNER & ENGINEER OF ANY POTENTIAL CONFLICTS

CONTACT TRAFFIC ENGINEERING AT 910-341-7888 FORTY-EIGHT HOURS PRIOR TO ANY EXCAVATION IN THE RIGHT OF WAY

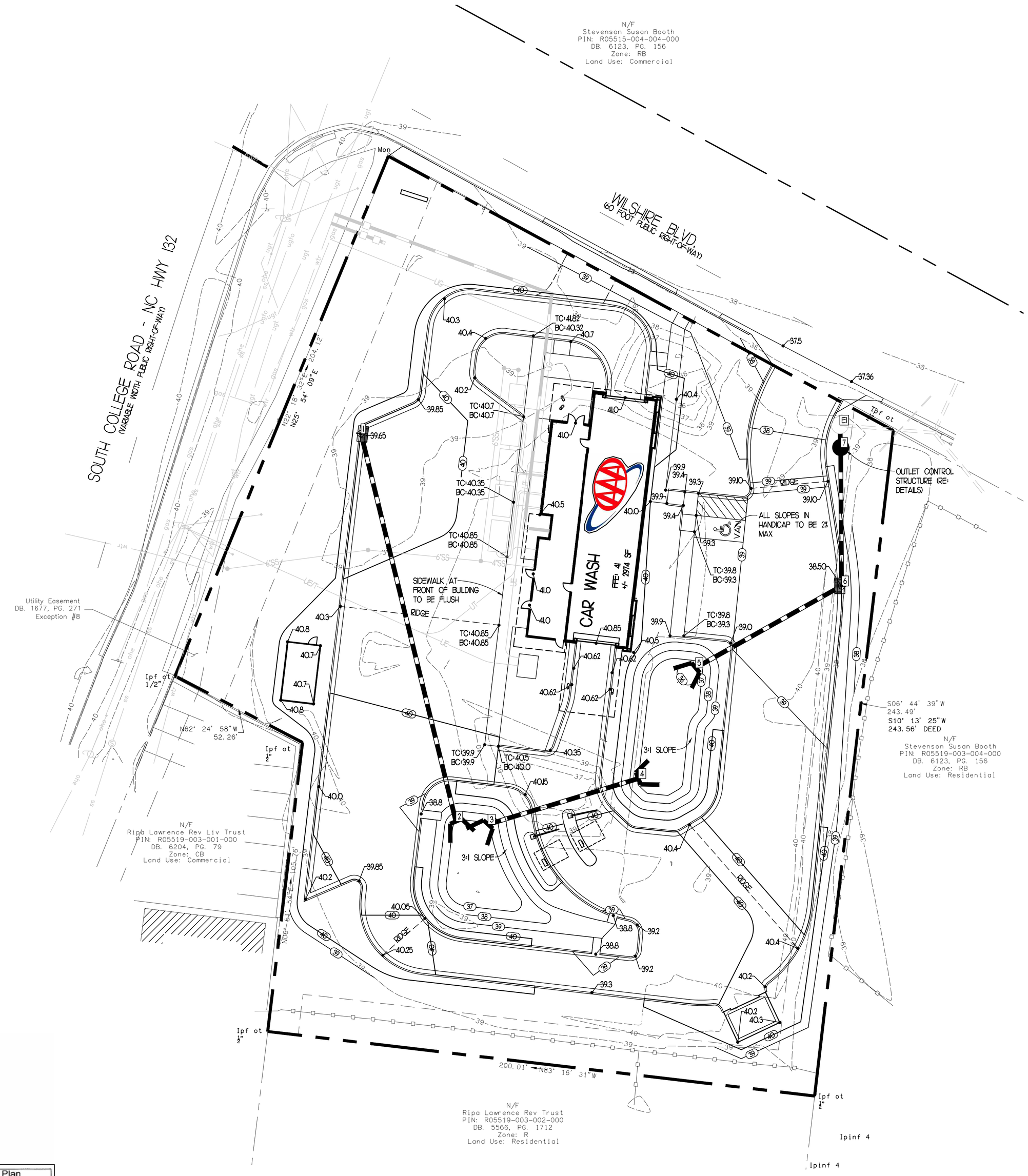

LEGEND

EXISTING	PROPOSED	DESCRIPTION
760	760	CONTOUR LINE
60.00 ×	60.00●	SPOT ELEVATION
□	■	STORM DRAIN INLET
		STORM DRAIN PIPE
wtr		WATER LINE
uge	UE	UNDERGROUND ELECTRIC LINE
ohe		OVERHEAD ELECTRIC LINE
ugt	UT	UNDERGROUND TELEPHONE LINE
gas	G	GAS LINE
ss	SS	SANITARY SEWER LINE
Ⓢ		MANHOLE
		LIMITS OF DISTURBANCE
		LIMITS OF UNDERGROUND DETENTION & INFILTRATION

CONTRACTOR TO PROVIDE AS-BUILT OF STORM DRAIN SYSTEM

STORMDRAIN STRUCTURE TABLE				
STR. NO.	TYPE	RIM	INV. IN	INV. OUT
1	COMB. INLET	39.65		37.42 (2)
2	HEADWALL	-------	36.70 (1)	
3	HEADWALL	-------		36.59 (4)
4	HEADWALL	-------	36.30 (3)	
5	HEADWALL	-------		36.19 (6)
6	COMB. INLET	38.50	35.88 (5)	35.78 (7)
7	OUTLET CONT. STRUCTURE	39.10	35.53 (6)	35.43 (E1)
E1	EXIST. STR.	39.88	35.38 (7)	35.28 0

ONSITE STORMDRAIN PIPE TABLE					
STORMDRAIN PIPE	SIZE	LENGTH	SLOPE	INV. IN	INV. OUT
- E1	12"	34'	0.6%	35.06'	35.28'
2 - 1	12"	145'	0.50%	36.70'	37.42'
4 - 3	12"	57'	0.5%	36.30'	36.59'
5 - 6	12"	61'	0.5%	36.19'	35.88'
6 - 7	12"	50'	0.50%	35.78'	35.53'
7 - E1	12"	8'	0.62%	35.43'	35.38'

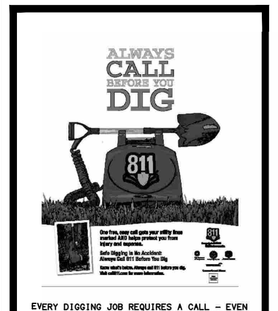

EVERY DIGGING JOB REQUIRES A CALL - EVEN SMALL PROJECTS LIKE PLANTING TREES OR SHRUBS. IF YOU HIT AN UNDERGROUND UTILITY LINE WHILE DIGGING, YOU CAN HARM YOURSELF OR THOSE AROUND YOU, DISRUPT SERVICE TO AN ENTIRE NEIGHBORHOOD AND POTENTIALLY BE RESPONSIBLE FOR FINES AND REPAIR COSTS.

SMART DIGGING MEANS CALLING 811 BEFORE EACH JOB. WHETHER YOU ARE A HOMEOWNER OR A PROFESSIONAL EXCAVATOR, ONE CALL TO 811 GETS YOUR UNDERGROUND UTILITY LINES MARKED FOR FREE.

Approved Construction Plan

	Name	Date
Planning		
Traffic		
Fire		

GRADING PLAN

SCALE 1" = 20'

REVISIONS	BY

FREELAND and KAUFFMAN, INC.
Engineers * Landscape Architects
209 West Stone Avenue
Greenville, South Carolina 29609
864-233-5497

PRELIMINARY NOT FOR CONSTRUCTION

AAA CAR WASH
WILMINGTON, NC
MPV PROPERTIES
2400 SOUTH BOULEVARD, #300
CHARLOTTE, NC 28203
(704)-248-2100

DRAWN	AJW
CHECKED	BTS
DATE	6/17/2019
SCALE	AS NOTED
DRAWING	9

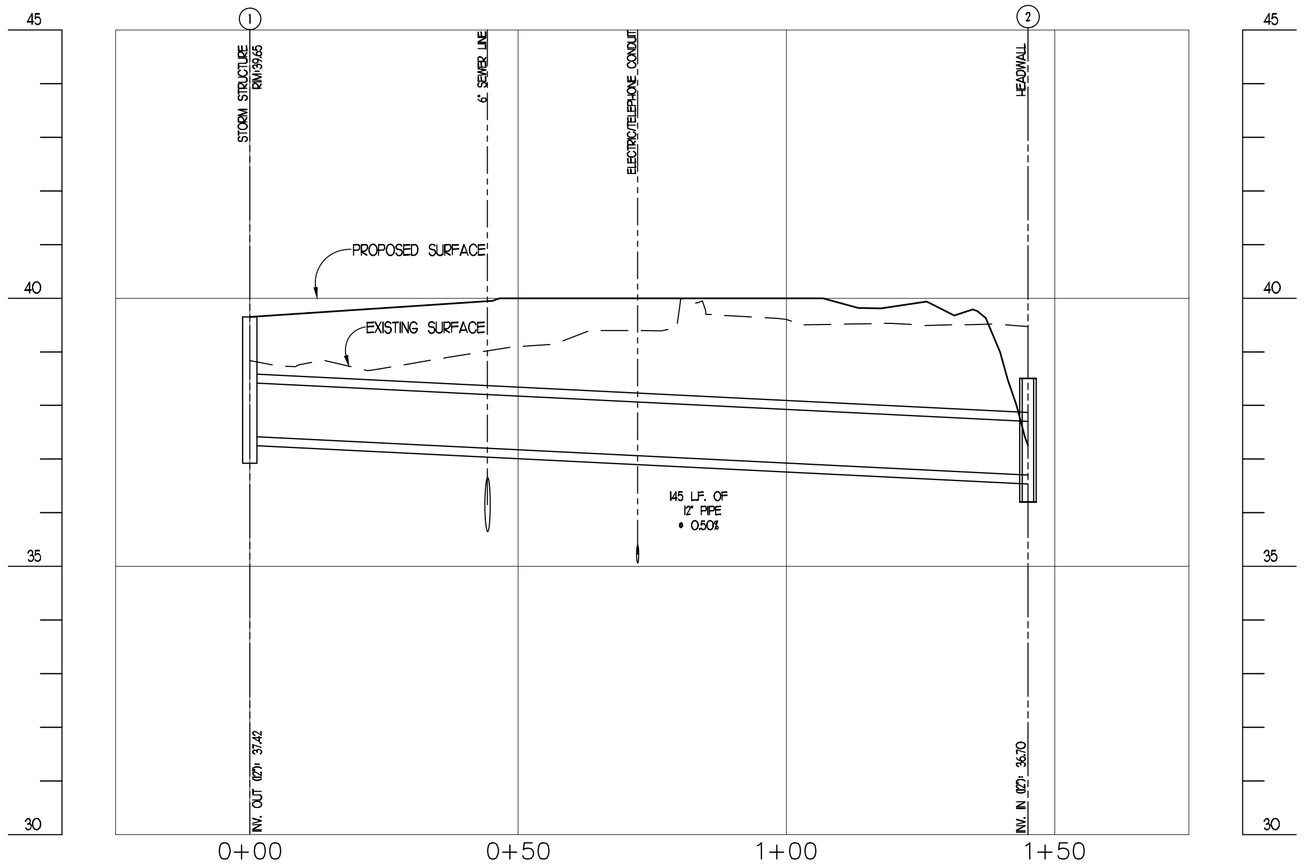

1 - 2

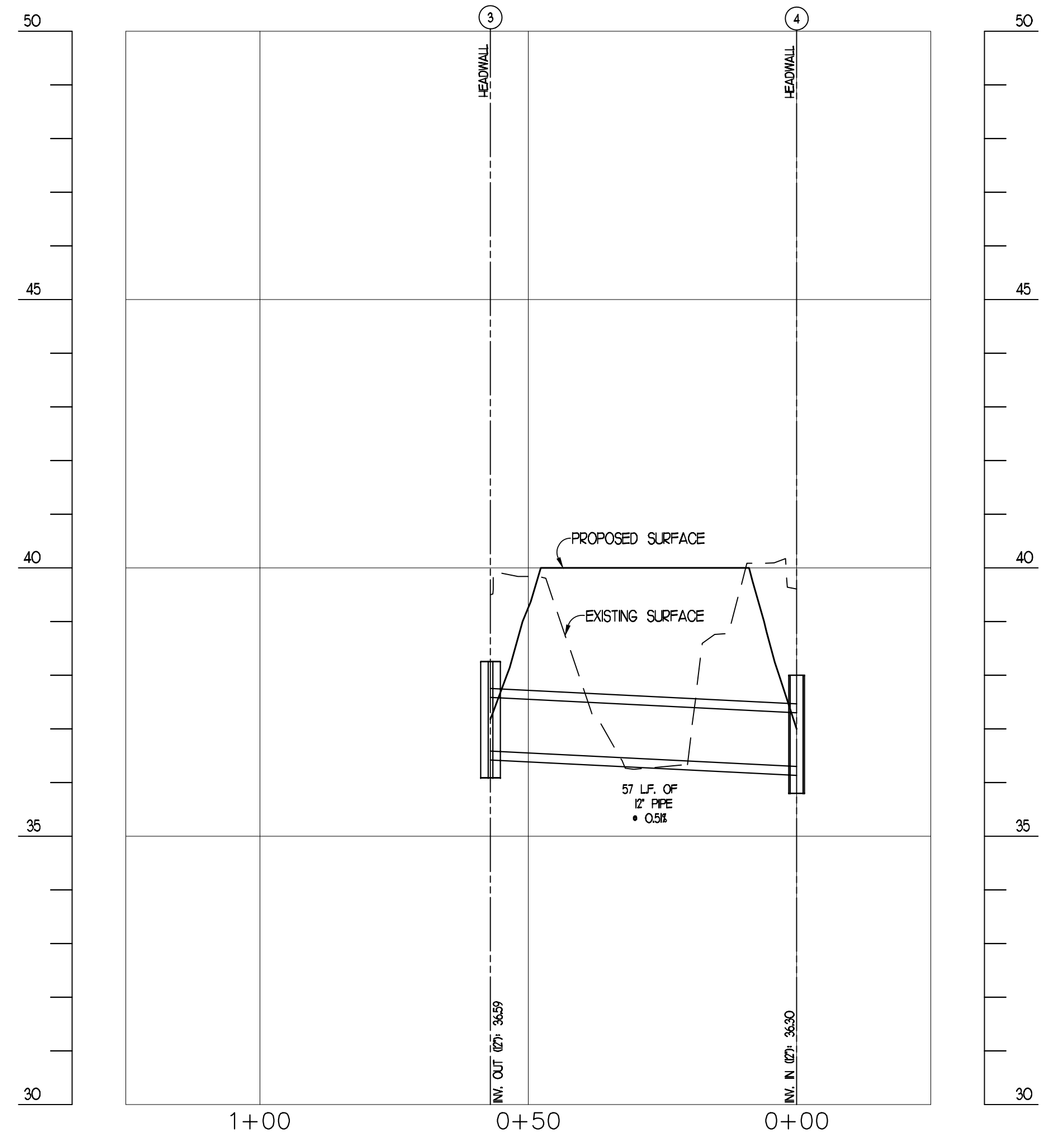

3 - 4

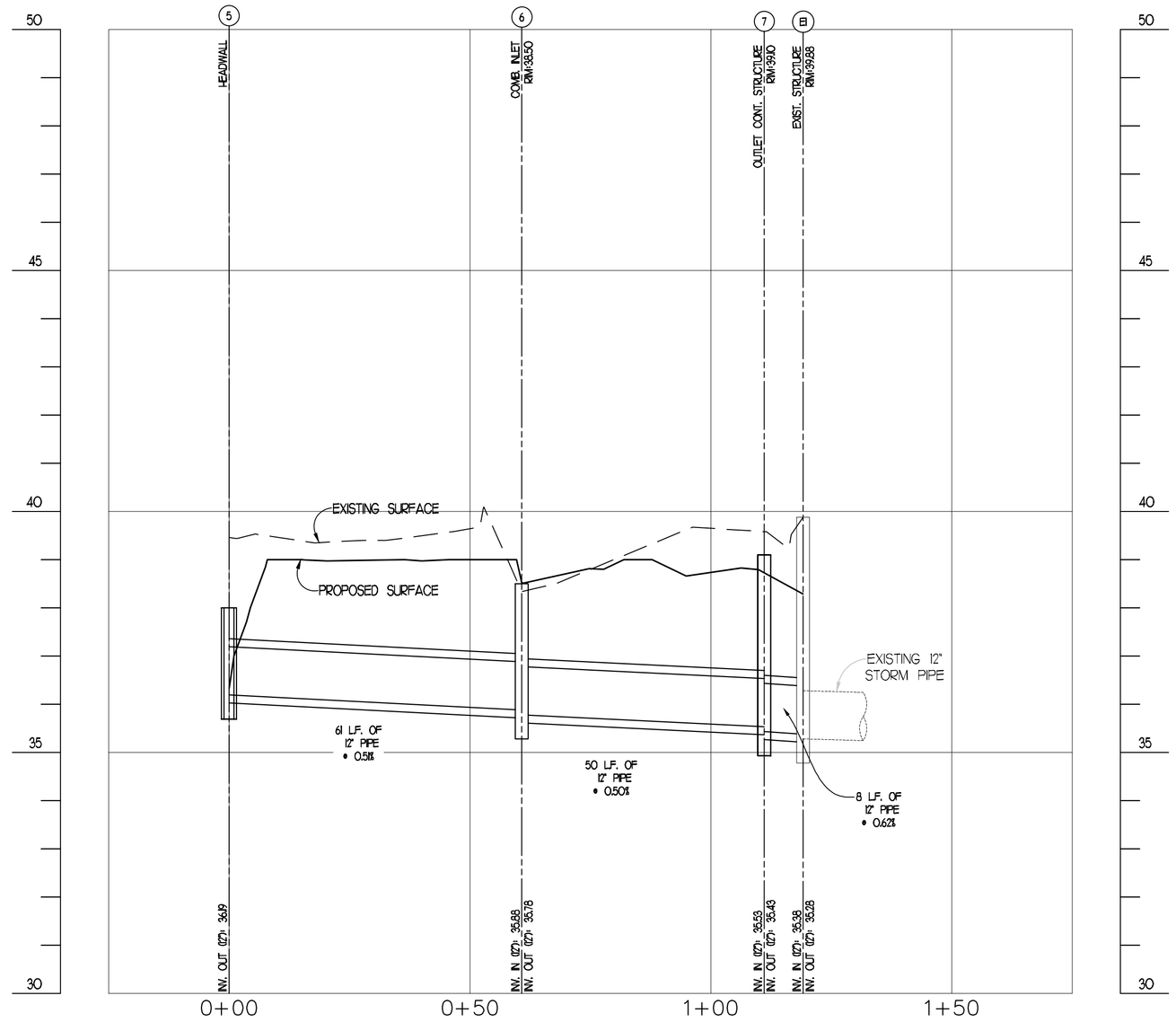

5 - E1

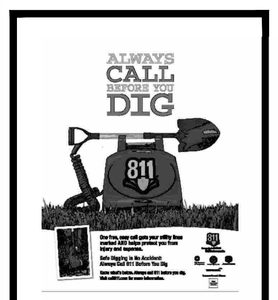

EVERY DIGGING JOB REQUIRES A CALL – EVEN SMALL PROJECTS LIKE PLANTING TREES OR SHRUBS. IF YOU HIT AN UNDERGROUND UTILITY LINE WHILE DIGGING, YOU CAN HARM YOURSELF OR THOSE AROUND YOU, DISRUPT SERVICE TO AN ENTIRE NEIGHBORHOOD AND POTENTIALLY BE RESPONSIBLE FOR FINES AND REPAIR COSTS.

SMART DIGGING MEANS CALLING 811 BEFORE EACH JOB. WHETHER YOU ARE A HOMEOWNER OR A PROFESSIONAL EXCAVATOR, ONE CALL TO 811 GETS YOUR UNDERGROUND UTILITY LINES MARKED FOR FREE.

STORM DRAIN PIPE SPECIFICATION:

TYPE I: REINFORCED CONCRETE PIPE (RCP) CLASS III, WALL B PER ASTM C-76 (ASTM C-76M) PER SPECIFICATIONS.

ALL PIPES IN PUBLIC RIGHTS-OF-WAY TO BE CLASS III RCP, UNLESS OTHERWISE NOTED

Approved Construction Plan

	Name	Date
Planning		
Traffic		
Fire		

STORM PROFILES

VERTICAL SCALE 1" = 2'

SCALE 1" = 20'

REVISIONS	BY

FREELAND and KAUFFMAN, INC.
Engineers * Landscape Architects
209 West Stone Avenue
Greenville, South Carolina 29609
864-233-5497

PRELIMINARY NOT FOR CONSTRUCTION

AAA CAR WASH
WILMINGTON, NC
MPV PROPERTIES
2400 SOUTH BOULEVARD, #300
CHARLOTTE, NC 28203
(704)-248-2100

DRAWN	AJW
CHECKED	BTS
DATE	6/17/2019
SCALE	AS NOTED
DRAWING	10

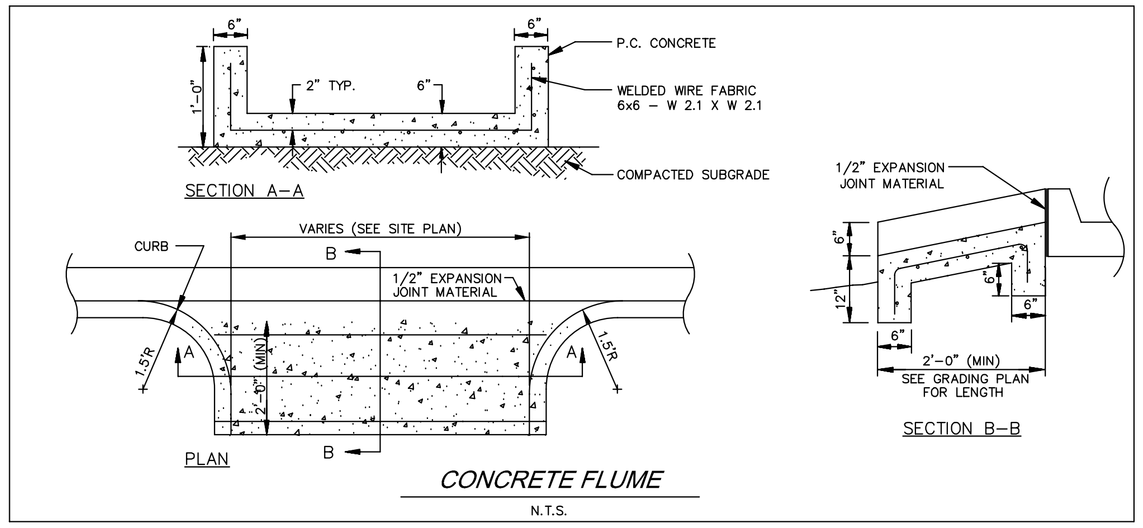

CONCRETE FLUME

N.T.S.

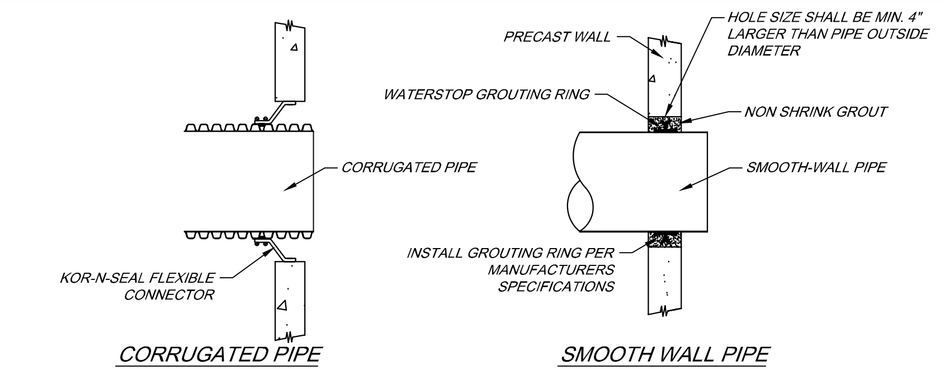

WATER-TIGHT PIPE TO MANHOLE CONNECTION DETAIL

NOTES:
1. HOLE SHALL BE A MIN. 4" LARGER THAN PIPE OUTSIDE DIAMETER
2. HOLES SHALL BE PRECAST OR CORED.

Approved Construction Plan

	Name	Date
Planning		
Traffic		
Fire		

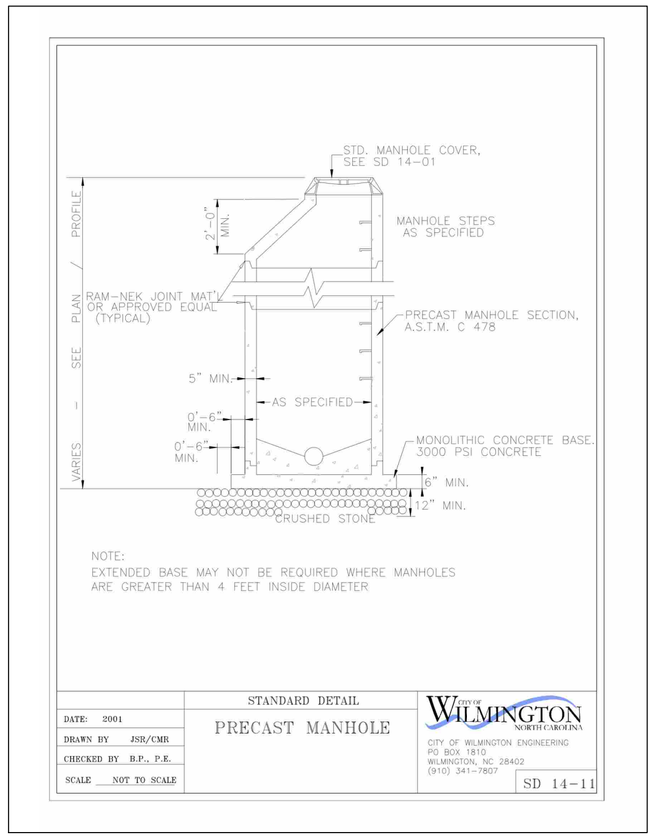

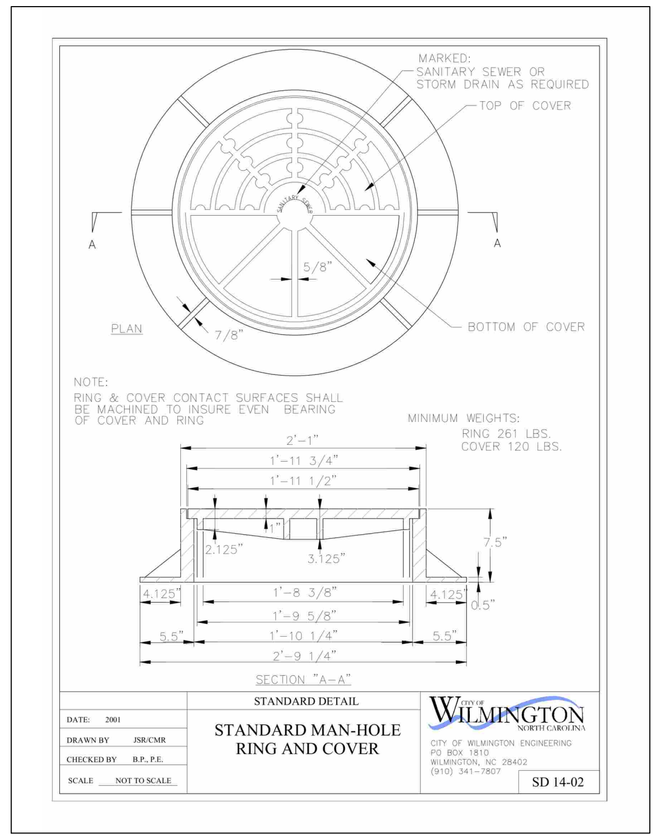

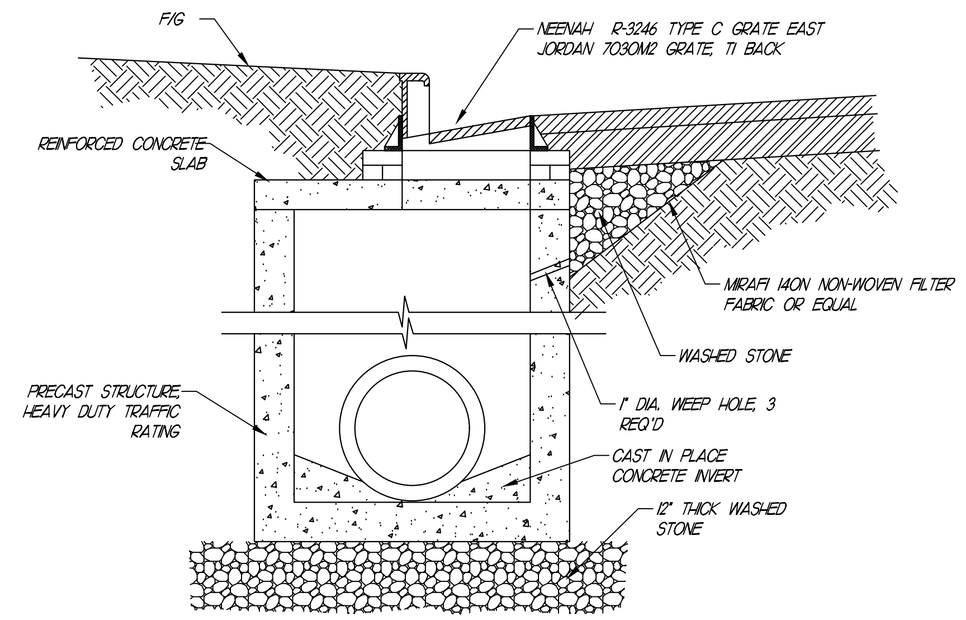

COMBINATION INLET

NOTES:
1. CONCRETE SHALL BE 4,000SPI MINIMUM FOR ALL PRECAST CONCRETE STORM STRUCTURES.
2. PRECAST CONCRETE STRUCTURES MAY ONLY BE INSTALLED TO DEPTHS CERTIFIED AS ACCEPTABLE BY THE MANUFACTURER.
3. BRICK MAY BE USED TO ADJUST FRAME, GRATE, & HOOD TO SURFACE ELEVATION A MAXIMUM OF 12 INCHES.

GENERAL NOTES:

- USE 4000 PSI CONCRETE, PROVIDE FOR H-20 TRAFFIC LOADING.
- PROVIDE ALL REINFORCING STEEL WHICH MEETS ASTM A615 FOR GRADE 60 AND WELDED WIRE FAVRIC CONFORMING TO ASTM A185.
- PLACE LIFT HOLES OR PINS IN ACCORDANCE WITH OSHA STANDARD 1926.704
- PROVIDE FORMED OPENINGS, FOR PIPE TO PROVIDE REQUIRED SIZE AND LOCATION. SEAL OPENINGS WITH HYDRAULIC CEMENT.
- ALL ELEMENTS PRECAST TO MEET ASTM C913.
- SET ON 6" WASHED STONE
- FRAME AND GRATE HEIGHT MAY BE ADJUSTED WITH BRICK.
- PROVIDE PRECAST STURCTURES OVER 4'-0" IN DEPTH WITH STEPS/LADDER INSTALLED IN ACCORDANCE WITH ASHA STANDARD 1910.27 AND AS FIELD CONDITIONS DICTATE.
- WELDED WIRE FABRIC MAY BE SUBSTITUTED FOR REBAR AS LONG AS THE SAME AREA OF STEEL IS PROVIDED.
- SEAL JOINTS WITH A FLEXIBLE BUTYL RUBBER BASE CONFORMING TO FEDERAL SPECIFICATION SS-S-21A, AASHTO M-198, TYPE B – BUTYL RUBBER.
- USE FRAME AND GRATE AS PER SD-19.
- GROUT INVERT TO PROVIDE SMOOTH FLOW

STANDARD DETAIL
PRECAST DRAINAGE STRUCTURE GENERAL NOTES
DATE: 2001
DRAWN BY JSR/CMR
CHECKED BY B.P., P.E.
SCALE NOT TO SCALE
CITY OF WILMINGTON NORTH CAROLINA
CITY OF WILMINGTON ENGINEERING
PO BOX 1810
WILMINGTON, NC 28402
(910) 341-7807
SD 2-24a

OUTLET STRUCTURE (DS NO. 7)

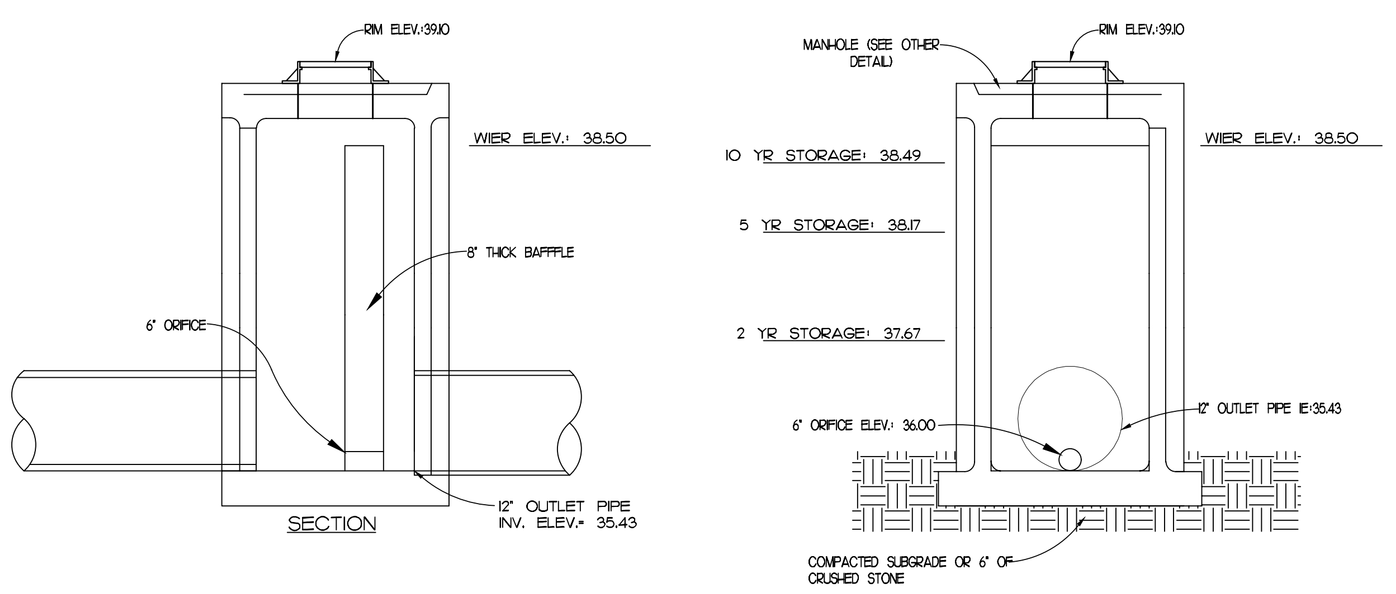

DETENTION PIPE OUTLET STRUCTURE

NTS

DETENTION PIPE OUTLET STRUCTURE TO HAVE STEPS LIKE STORM MANHOLE. SEE STORM MANHOLE DETAILS.
CONTRACTOR TO SIZE MANHOLE APPROPRIATELY FOR ALL NEEDED PIPE CONNECTIONS

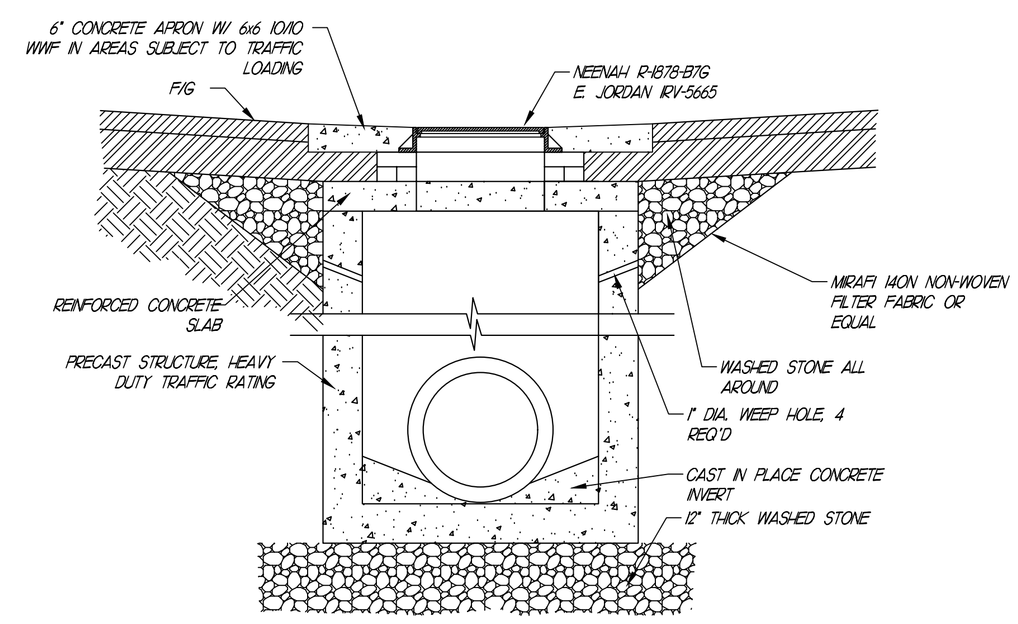

GRATE INLET

NOTES:
1. CONCRETE SHALL BE 4,000SPI MINIMUM FOR ALL PRECAST CONCRETE STORM STRUCTURES.
2. PRECAST CONCRETE STRUCTURES MAY ONLY BE INSTALLED TO DEPTHS CERTIFIED AS ACCEPTABLE BY THE MANUFACTURER.
3. BRICK MAY BE USED TO ADJUST FRAME, GRATE, & HOOD TO SURFACE ELEVATION A MAXIMUM OF 12 INCHES.

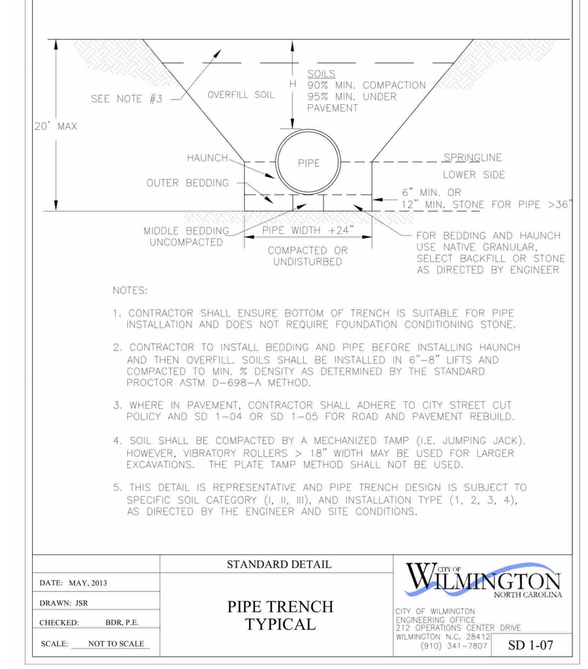

NOTES:

1. CONTRACTOR SHALL ENSURE BOTTOM OF TRENCH IS SUITABLE FOR PIPE INSTALLATION AND DOES NOT REQUIRE FOUNDATION CONDITIONING STONE.
2. CONTRACTOR TO INSTALL BEDDING AND PIPE BEFORE INSTALLING HAUNCH AND THEN OVERFILL. SOILS SHALL BE INSTALLED IN 6"–8" LIFTS AND COMPACTED TO MIN. % DENSITY AS DETERMINED BY THE STANDARD PROCTOR ASTM D-698-A METHOD.
3. WHERE IN PAVEMENT, CONTRACTOR SHALL ADHERE TO CITY STREET CUT POLICY AND SD 1-04 OR SD 1-05 FOR ROAD AND PAVEMENT REBUILD.
4. SOIL SHALL BE COMPACTED BY A MECHANIZED TAMP (I.E. JUMPING JACK). HOWEVER, VIBRATORY ROLLERS > 18" WIDTH MAY BE USED FOR LARGER EXCAVATIONS. THE PLATE TAMP METHOD SHALL NOT BE USED.
5. THIS DETAIL IS REPRESENTATIVE AND PIPE TRENCH DESIGN IS SUBJECT TO SPECIFIC SOIL CATEGORY (I, II, III), AND INSTALLATION TYPE (1, 2, 3, 4), AS DIRECTED BY THE ENGINEER AND SITE CONDITIONS.

STANDARD DETAIL
PIPE TRENCH TYPICAL
DATE: MAY, 2013
DRAWN: JSR
CHECKED: BDR, P.E.
SCALE: NOT TO SCALE
CITY OF WILMINGTON NORTH CAROLINA
CITY OF WILMINGTON
ENGINEERING OFFICE
312 OPERATIONS CENTER DRIVE
WILMINGTON N.C. 28412
(910) 341-7807
SD 1-07

STORMDRAIN DETAILS

REVISIONS	BY

FREELAND and KAUFFMAN, INC.
Engineers * Landscape Architects
209 West Stone Avenue
Greenville, South Carolina 29609
864-233-5497

PRELIMINARY NOT FOR CONSTRUCTION

AAA CAR WASH
WILMINGTON, NC
MPV PROPERTIES
2400 SOUTH BOULEVARD, #300
CHARLOTTE, NC 28203
(704)-248-2100

DRAWN	AJW
CHECKED	BTS
DATE	6/17/2019
SCALE	AS NOTED
DRAWING	11

S.W.P.P. PLAN NOTES:

1. ALL SITE WORK SHALL BE DONE IN ACCORDANCE WITH THE PLANS PREPARED BY FREELAND & KAUFFMAN, INC., THE CURRENT REQUIREMENTS OF THE CITY OF WILMINGTON, THE APPLICABLE SECTIONS OF THE NCDOT STANDARD SPECIFICATIONS FOR ROADWAY CONSTRUCTION, AND ALL OTHER PERTINENT FEDERAL AND STATE LAWS.

2. THE CONTRACTOR SHALL COMPLY AT ALL TIMES WITH APPLICABLE FEDERAL, STATE AND LOCAL LAWS, PROVISIONS, AND POLICIES GOVERNING SAFETY AND HEALTH, INCLUDING THE FEDERAL CONSTRUCTION SAFETY ACT (PUBLIC LAW 91-54), FEDERAL REGISTER, CHAPTER XVII, PART 1926 OF TITLE 29 REGULATIONS, OCCUPATIONAL SAFETY AND HEALTH REGULATIONS FOR CONSTRUCTION, AND SUBSEQUENT PUBLICATIONS UPDATING THESE REGULATIONS.

3. THE CONTRACTOR SHALL BE RESPONSIBLE FOR EXAMINING THE AREAS AND CONDITIONS UNDER WHICH THE PROJECT IS TO BE CONSTRUCTED PRIOR TO THE SUBMISSION OF A BID. SUBMISSION OF A BID SHALL BE CONSTRUED TO MEAN THE CONTRACTOR HAS REVIEWED THE SITE AND IS FAMILIAR WITH CONDITIONS AND CONSTRAINTS OF THE SITE.

4. BEFORE EXCAVATION, ALL UNDERGROUND UTILITIES SHALL BE LOCATED IN THE FIELD BY THE PROPER AUTHORITIES. THE CONTRACTOR SHALL NOTIFY "CALL BEFORE YOU DIG" AT 811. THE LOCATION OF ALL UTILITIES AND UNDERGROUND STRUCTURES ARE APPROXIMATE AND MAY NOT ALL BE SHOWN. IT IS THE RESPONSIBILITY OF THE CONTRACTOR TO DETERMINE THE EXISTENCE AND EXACT LOCATION OF ALL UTILITIES AND UNDERGROUND STRUCTURES.

5. CONTRACTOR SHALL REFER TO OTHER PLANS WITHIN THIS CONSTRUCTION SET FOR OTHER PERTINENT INFORMATION.

6. EXCEPT AS NOTED BELOW, STABILIZATION SHALL BE INITIATED AS SOON AS PRACTICABLE IN PORTIONS OF THE SITE WHERE CONSTRUCTION ACTIVITIES HAVE TEMPORARILY OR PERMANENTLY CEASED, BUT IN NO CASE MORE THAN SEVEN DAYS AFTER THE CONSTRUCTION ACTIVITY IN THAT PORTION OF THE SITE HAS PERMANENTLY CEASED. WHERE THE INITIATION OF STABILIZATION MEASURES BY THE SEVENTH DAY AFTER CONSTRUCTION ACTIVITY TEMPORARILY OR PERMANENTLY CEASES IS PRECLUDED BY SNOW COVER, STABILIZATION MEASURES SHALL BE INITIATED AS SOON AS CONATIONS ALLOW. WHERE CONSTRUCTION ACTIVITY WILL RESUME ON A PORTION OF THE SITE WITHIN 21 DAYS FROM WHEN ACTIVITY CEASED, (E.G., THE TOTAL TIME PERIOD THAT CONSTRUCTION ACTIVITY IS TEMPORARILY HALTED IS LESS THAN 21 DAYS) THEN STABILIZATION MEASURES DO NOT HAVE TO BE INITIATED ON THAT PORTION OF THE SITE BY THE SEVENTH DAY AFTER CONSTRUCTION ACTIVITIES HAVE TEMPORARILY CEASED. AREAS WHERE THE SEED HAS FAILED TO GERMINATE ADEQUATELY (UNIFORM PERENNIAL VEGETATIVE COVER WITH A DENSITY OF 70%) WITHIN 30 DAYS AFTER SEEDING AND MULCHING MUST BE RESEEDED IMMEDIATELY, OR AS SOON AS WEATHER CONDITIONS ALLOW. PERMANENT STABILIZATION FOR ALL DISTURBED AREAS IS TO BE COMPLETE WITHIN 15 WORKING DAYS OR 90 CALENDAR DAYS (WHICHEVER IS SHORTER) FOLLOWING COMPLETION OF CONSTRUCTION. DIVERSIONS MUST BE STABILIZED PRIOR TO BECOMING FUNCTIONAL.

7. THE CONTRACTOR SHALL INSPECT, REPAIR AND ADD STONE TO THE STONE CONSTRUCTION ENTRANCE WHEN IT BECOMES SATURATED WITH MUD TO INSURE THAT IT WORKS AS INTENDED.

8. THE TOPSOIL STOCKPILE SHALL BE GRADED TO DRAIN, AND SEEDED WITH THE TEMPORARY SEED MIX.

9. SILT REMOVED FROM INLET PROTECTION AND FROM BEHIND THE SILT FENCES SHALL BE PLACED ON THE TOPSOIL STOCKPILE.

10. ALL EROSION AND SEDIMENT CONTROL DEVICES SHALL BE CLEANED, INSPECTED AND REPAIRED AFTER EACH SIGNIFICANT RAINFALL (0.50" / 24 HR) AND AT LEAST ONCE EVERY SEVEN CALENDAR DAYS.

11. TEMPORARY SEDIMENT CONTROL MEASURES (SILT FENCE, CONSTRUCTION ENTRANCE, ETC.) SHALL BE MAINTAINED UNTIL ALL CONTRIBUTING AREAS ARE GRADED AND STABILIZED.

12. IF IT IS ANTICIPATED THAT DEWATERING WILL BE REQUIRED FOR UTILITY INSTALLATION AND POSSIBLY FOR FOOTING, CONTRACTOR IS RESPONSIBLE FOR INSTALLING A DEWATERING.

NPDES Stormwater Discharge Permit for Construction Activities (NCGO1) — NCDENR/Division of Energy, Mineral and Land Resources

STABILIZATION TIMEFRAMES
(Effective Aug. 3, 2015)

Site Area Description	Stabilization	Timeframe Exceptions
Perimeter dikes, swales, ditches, slopes	7 days	None
High Quality Water (HQW) Zones	7 days	None
Slopes steeper than 3:1	7 days	If slopes are 10' or less in length and are not steeper than 2:1, 14 days are allowed.
Slopes 3:1 or flatter	14 days	7 days for slopes greater than 50' in length.
All other areas with slopes flatter than 4:1	14 days	None, except for perimeters and HQW Zones.

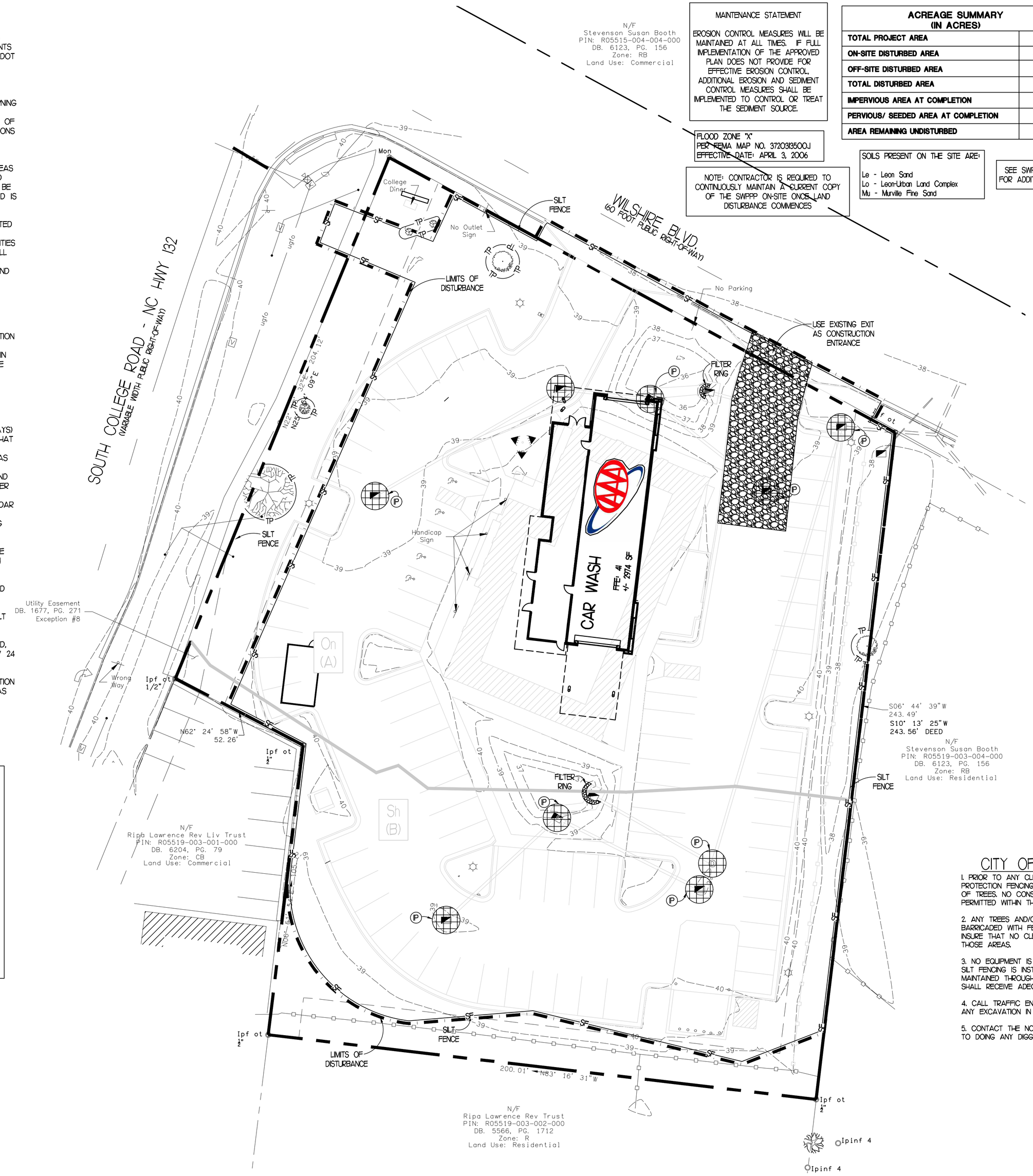

MAINTENANCE STATEMENT

EROSION CONTROL MEASURES WILL BE MAINTAINED AT ALL TIMES. IF FULL IMPLEMENTATION OF THE APPROVED PLAN DOES NOT PROVIDE FOR EFFECTIVE EROSION CONTROL, ADDITIONAL EROSION AND SEDIMENT CONTROL MEASURES SHALL BE IMPLEMENTED TO CONTROL OR TREAT THE SEDIMENT SOURCE.

FLOOD ZONE "X"
PER FEMA MAP NO. 3720398500J
EFFECTIVE DATE: APRIL 3, 2006

NOTE: CONTRACTOR IS REQUIRED TO CONTINUOUSLY MAINTAIN A CURRENT COPY OF THE SWPPP ON-SITE ONCE LAND DISTURBANCE COMMENCES

ACREAGE SUMMARY
(IN ACRES)

TOTAL PROJECT AREA	+/- 0.91
ON-SITE DISTURBED AREA	+/- 0.92
OFF-SITE DISTURBED AREA	+/- 0.17
TOTAL DISTURBED AREA	+/- 1.09
IMPERVIOUS AREA AT COMPLETION	+/- 0.48
PERVIOUS/ SEEDED AREA AT COMPLETION	+/- 0.61
AREA REMAINING UNDISTURBED	+/- 0

SOILS PRESENT ON THE SITE ARE:

Le - Leon Sand
Lo - Leon-Urban Land Complex
Mu - Murville Fine Sand

SEE SWPPP DETAILS FOR ADDITIONAL NOTES

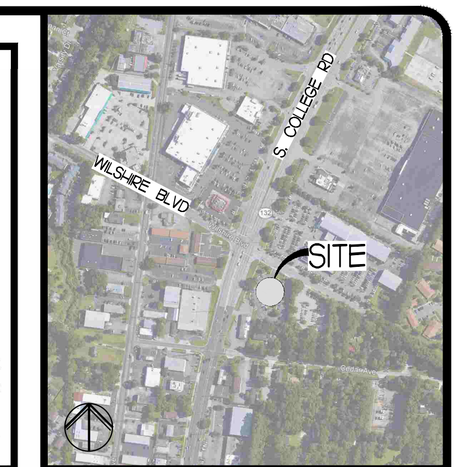

S.W.P.P. LEGEND

EXISTING	PROPOSED	DESCRIPTION
78	77	CONTOUR LINE
		STORM DRAIN LINE
	SF	SILT FENCE
		LIMITS OF DISTURBANCE
	P	INLET PROTECTION
		CONSTRUCTION ENTRANCE
	ArA	SOIL TYPE LABEL & BOUNDARY

CONSTRUCTION SEQUENCE

PHASE 1

1. NOTIFY NEW HANOVER COUNTY OF PENDING CONSTRUCTION PER PERMIT REQUIREMENTS, AND HOLD REQUIRED PRE-CONSTRUCTION MEETING. ALL CONTRACTORS MUST ATTEND THE PRE-CONSTRUCTION MEETING.
2. INSTALL CONSTRUCTION EXIT. REMOVE EXISTING IMPROVEMENTS ONLY AS NEEDED FOR INSTALLATION OF THE CONSTRUCTION EXIT.
3. CLEAR AND GRUB AS NECESSARY TO INSTALL PERIMETER CONTROLS, SILT FENCE, AND INLET PROTECTION.
4. ONCE PERIMETER CONTROLS, SILT FENCE, INLET PROTECTION AND CONSTRUCTION EXIT HAVE BEEN INSTALLED, BEGIN DEMOLITION OF EXISTING IMPROVEMENTS. DISPOSE OFF-SITE IN PROPER MANNER.
5. UPON COMPLETION BEGIN ROUGH GRADING OF THE SITE.

PHASE 2

1. CONSTRUCT BUILDING PAD.
2. INSTALL TEMPORARY SEEDING AND MULCH STABILIZATION TO ALL AREAS WHERE WORK WILL BE CEASED FOR A PERIOD OF MORE THAN 14 DAYS.
3. BEGIN STORM DRAIN & CONSTRUCTION. INSTALL INLET PROTECTION MEASURES AS EACH CATCH BASIN IS INSTALLED.
4. CONTINUALLY INSPECT AND MAINTAIN ALL BMP'S. REPAIR BMP'S AS NEEDED.
5. BEGIN BUILDING CONSTRUCTION.
6. APPLY PERMANENT SEEDING TO ALL AREAS AS SOON AS THEY ARE COMPLETE. DO NOT WAIT UNTIL JOB COMPLETION TO PERMANENTLY SEED DISTURBED AREAS.
7. INSTALL UTILITIES.
8. INSTALL CURB AND GUTTER AND FINE GRADE PARKING AREAS. STONE BASE SHALL BE INSTALLED IN ALL PAVED AREAS AS SOON AS PRACTICABLE. CONSTRUCTION EXIT SHALL BE REMOVED ONLY ONCE THE BUILDING PAD AND PARKING LOT HAVE BEEN STABILIZED WITH STONE BASE. PAVE SITE AND INSTALL APPROPRIATE INLET PROTECTION DEVICES FOR PAVED AREAS AS WORK PROGRESSES.
9. COMPLETE BUILDING CONSTRUCTION, SIDEWALKS, PLANTINGS, ETC.
10. REMOVE TEMPORARY BMP'S AS SOON AS THEIR CONTRIBUTING DRAINAGE AREAS HAVE BEEN STABILIZED. SEED AND MULCH ANY DISTURBANCE FROM REMOVAL OF TEMPORARY BMP'S.
11. CONTACT NEW HANOVER COUNTY FOR FINAL INSPECTION.

CITY OF WILMINGTON PLAN NOTES

1. PRIOR TO ANY CLEARING, GRADING OR CONSTRUCTION ACTIVITY, TREE PROTECTION FENCING SHALL BE INSTALLED AROUND PROTECTED TREES OR GROVES OF TREES. NO CONSTRUCTION WORKERS, TOOLS, MATERIALS, OR VEHICLES ARE PERMITTED WITHIN THE TREE PROTECTION FENCING.

2. ANY TREES AND/OR AREAS DESIGNATED TO BE PROTECTED MUST BE PROPERLY BARRICADED WITH FENCING AND PROTECTED THROUGHOUT CONSTRUCTION TO INSURE THAT NO CLEARING, GRADING OR STAGING OF MATERIALS WILL OCCUR IN THOSE AREAS.

3. NO EQUIPMENT IS ALLOWED ON SITE UNTIL ALL TREE PROTECTION FENCING AND SILT FENCING IS INSTALLED AND APPROVED. PROTECTIVE FENCING IS TO BE MAINTAINED THROUGHOUT THE DURATION OF THE PROJECT, AND CONTRACTORS SHALL RECEIVE ADEQUATE INSTRUCTION ON TREE PROTECTION METHODS.

4. CALL TRAFFIC ENGINEERING AT 910-341-7888 FORTY-EIGHT (48) HOURS PRIOR TO ANY EXCAVATION IN THE RIGHT-OF-WAY.

5. CONTACT THE NORTH CAROLINA ONE CALL CENTER AT 1-800-632-4949 PRIOR TO DOING ANY DIGGING, CLEARING, OR GRADING.

24 HOUR CONTACT: BRETT JARRETT, MVP PROPERTIES, 336-480-7173

SEDIMENT TUBE TO BE EROSION EEL OR APPROVED EQUAL

AFTER INSTALLATION, PERMEABLE PAVEMENT SHALL BE PROTECTED FROM SEDIMENT DEPOSITION UNTIL THE SITE IS COMPLETED AND STABILIZED. CONTRACTOR TO COORDINATED WITH ON-SITE TESTING AGENCY TO OBTAIN IN-SITU INFILTRATION PERMEABILITY TEST CERTIFIED & APPROVED BY CITY OF WILMINGTON AFTER SITE STABILIZATION

Approved Construction Plan

	Name	Date
Planning		
Traffic		
Fire		

SWPPP PHASE 1

SCALE 1" = 20'

REVISIONS	BY

FREELAND and KAUFFMAN, INC.
Engineers * Landscape Architects
209 West Stone Avenue
Greenville, South Carolina 29609
864-233-5497

PRELIMINARY NOT FOR CONSTRUCTION

AAA CAR WASH
WILMINGTON, NC
MPV PROPERTIES
2400 SOUTH BOULEVARD, #300
CHARLOTTE, NC 28203
(704)-248-2100

DRAWN	AJW
CHECKED	BTS
DATE	6/17/2019
SCALE	AS NOTED
DRAWING	12

S.W.P.P. PLAN NOTES:

1. ALL SITE WORK SHALL BE DONE IN ACCORDANCE WITH THE PLANS PREPARED BY FREELAND & KAUFFMAN, INC., THE CURRENT REQUIREMENTS OF THE CITY OF WILMINGTON, THE APPLICABLE SECTIONS OF THE NCDOT STANDARD SPECIFICATIONS FOR ROADWAY CONSTRUCTION, AND ALL OTHER PERTINENT FEDERAL AND STATE LAWS.

2. THE CONTRACTOR SHALL COMPLY AT ALL TIMES WITH APPLICABLE FEDERAL, STATE AND LOCAL LAWS, PROVISIONS, AND POLICIES GOVERNING SAFETY AND HEALTH, INCLUDING THE FEDERAL CONSTRUCTION SAFETY ACT (PUBLIC LAW 91-54), FEDERAL REGISTER, CHAPTER XVII, PART 1926 OF TITLE 29 REGULATIONS, OCCUPATIONAL SAFETY AND HEALTH REGULATIONS FOR CONSTRUCTION, AND SUBSEQUENT PUBLICATIONS UPDATING THESE REGULATIONS.

3. THE CONTRACTOR SHALL BE RESPONSIBLE FOR EXAMINING THE AREAS AND CONDITIONS UNDER WHICH THE PROJECT IS TO BE CONSTRUCTED PRIOR TO THE SUBMISSION OF A BID. SUBMISSION OF A BID SHALL BE CONSTRUED TO MEAN THE CONTRACTOR HAS REVIEWED THE SITE AND IS FAMILIAR WITH CONDITIONS AND CONSTRAINTS OF THE SITE.

4. BEFORE EXCAVATION, ALL UNDERGROUND UTILITIES SHALL BE LOCATED IN THE FIELD BY THE PROPER AUTHORITIES. THE CONTRACTOR SHALL NOTIFY "CALL BEFORE YOU DIG" AT 811. THE LOCATION OF ALL UTILITIES AND UNDERGROUND STRUCTURES ARE APPROXIMATE AND MAY NOT ALL BE SHOWN. IT IS THE RESPONSIBILITY OF THE CONTRACTOR TO DETERMINE THE EXISTENCE AND EXACT LOCATION OF ALL UTILITIES AND UNDERGROUND STRUCTURES.

5. CONTRACTOR SHALL REFER TO OTHER PLANS WITHIN THIS CONSTRUCTION SET FOR OTHER PERTINENT INFORMATION.

6. EXCEPT AS NOTED BELOW, STABILIZATION SHALL BE INITIATED AS SOON AS PRACTICABLE IN PORTIONS OF THE SITE WHERE CONSTRUCTION ACTIVITIES HAVE TEMPORARILY OR PERMANENTLY CEASED, BUT IN NO CASE MORE THAN SEVEN DAYS AFTER THE CONSTRUCTION ACTIVITY IN THAT PORTION OF THE SITE HAS PERMANENTLY CEASED. WHERE THE INITIATION OF STABILIZATION MEASURES BY THE SEVENTH DAY AFTER CONSTRUCTION ACTIVITY TEMPORARILY OR PERMANENTLY CEASES IS PRECLUDED BY SNOW COVER, STABILIZATION MEASURES SHALL BE INITIATED AS SOON AS CONATIONS ALLOW. WHERE CONSTRUCTION ACTIVITY WILL RESUME ON A PORTION OF THE SITE WITHIN 21 DAYS FROM WHEN ACTIVITY CEASED, (E.G., THE TOTAL TIME PERIOD THAT CONSTRUCTION ACTIVITY IS TEMPORARILY HALTED IS LESS THAN 21 DAYS) THEN STABILIZATION MEASURES DO NOT HAVE TO BE INITIATED ON THAT PORTION OF THE SITE BY THE SEVENTH DAY AFTER CONSTRUCTION ACTIVITIES HAVE TEMPORARILY CEASED. AREAS WHERE THE SEED HAS FAILED TO GERMINATE ADEQUATELY (UNIFORM PERENNIAL VEGETATIVE COVER WITH A DENSITY OF 70%) WITHIN 30 DAYS AFTER SEEDING AND MULCHING MUST BE RESEEDED IMMEDIATELY, OR AS SOON AS WEATHER CONDITIONS ALLOW. PERMANENT STABILIZATION FOR ALL DISTURBED AREAS IS TO BE COMPLETE WITHIN 15 WORKING DAYS OR 90 CALENDAR DAYS (WHICHEVER IS SHORTER) FOLLOWING COMPLETION OF CONSTRUCTION. DIVERSIONS MUST BE STABILIZED PRIOR TO BECOMING FUNCTIONAL.

7. THE CONTRACTOR SHALL INSPECT, REPAIR AND ADD STONE TO THE STONE CONSTRUCTION ENTRANCE WHEN IT BECOMES SATURATED WITH MUD TO INSURE THAT IT WORKS AS INTENDED.

8. THE TOPSOIL STOCKPILE SHALL BE GRADED TO DRAIN, AND SEEDED WITH THE TEMPORARY SEED MIX.

9. SILT REMOVED FROM INLET PROTECTION AND FROM BEHIND THE SILT FENCES SHALL BE PLACED ON THE TOPSOIL STOCKPILE.

10. ALL EROSION AND SEDIMENT CONTROL DEVICES SHALL BE CLEANED, INSPECTED AND REPAIRED AFTER EACH SIGNIFICANT RAINFALL (0.50" / 24 HR.) AND AT LEAST ONCE EVERY SEVEN CALENDAR DAYS.

11. TEMPORARY SEDIMENT CONTROL MEASURES (SILT FENCE, CONSTRUCTION ENTRANCE, ETC.) SHALL BE MAINTAINED UNTIL ALL CONTRIBUTING AREAS ARE GRADED AND STABILIZED.

12. IF IT IS ANTICIPATED THAT DEWATERING WILL BE REQUIRED FOR UTILITY INSTALLATION AND POSSIBLY FOR FOOTING, CONTRACTOR IS RESPONSIBLE FOR INSTALLING A DEWATERING.

NPDES Stormwater Discharge Permit for Construction Activities (NCG010) — NCDENR/Division of Energy, Mineral and Land Resources

STABILIZATION TIMEFRAMES
(Effective Aug. 3, 2011)

Site Area Description	Stabilization	Timeframe Exceptions
Perimeter dikes, swales, ditches, slopes	7 days	None
High Quality Water (HQW) Zones	7 days	None
Slopes steeper than 3:1	7 days	If slopes are 10' or less in length and are not steeper than 2:1, 14 days are allowed.
Slopes 3:1 or flatter	14 days	7 days for slopes greater than 50' in length.
All other areas with slopes flatter than 4:1	14 days	None, except for perimeters and HQW Zones.

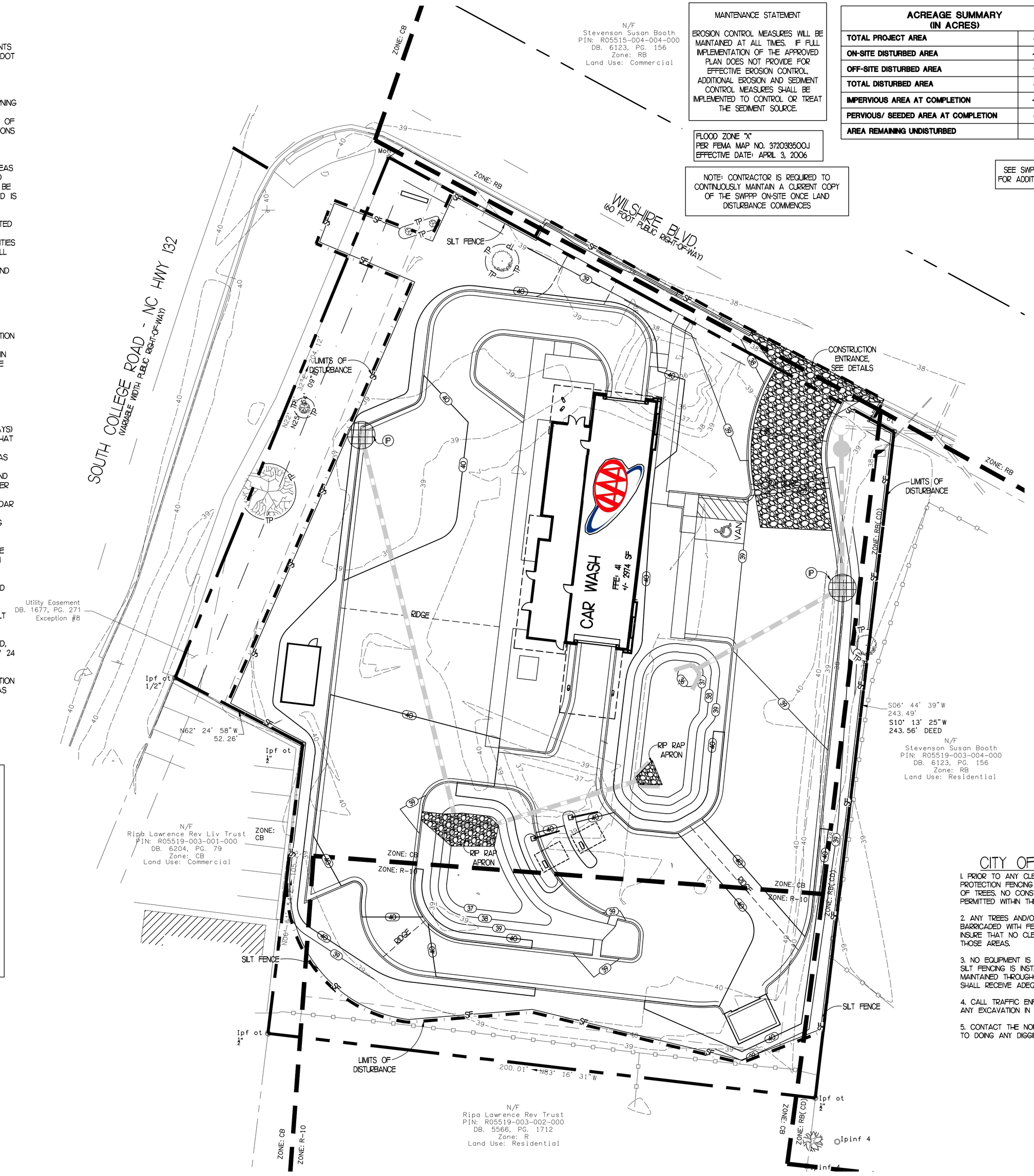

MAINTENANCE STATEMENT

EROSION CONTROL MEASURES WILL BE MAINTAINED AT ALL TIMES. IF FULL IMPLEMENTATION OF THE APPROVED PLAN DOES NOT PROVIDE FOR EFFECTIVE EROSION CONTROL, ADDITIONAL EROSION AND SEDIMENT CONTROL MEASURES SHALL BE IMPLEMENTED TO CONTROL OR TREAT THE SEDIMENT SOURCE.

FLOOD ZONE "X"
PER FEMA MAP NO. 3720398500J
EFFECTIVE DATE: APRIL 3, 2006

NOTE: CONTRACTOR IS REQUIRED TO CONTINUOUSLY MAINTAIN A CURRENT COPY OF THE SWPPP ON-SITE ONCE LAND DISTURBANCE COMMENCES

ACREAGE SUMMARY
(IN ACRES)

TOTAL PROJECT AREA	+/- 0.91
ON-SITE DISTURBED AREA	+/- 0.92
OFF-SITE DISTURBED AREA	+/- 0.17
TOTAL DISTURBED AREA	+/- 1.09
IMPERVIOUS AREA AT COMPLETION	+/- 0.48
PERVIOUS/ SEEDED AREA AT COMPLETION	+/- 0.61
AREA REMAINING UNDISTURBED	+/- 0

SEE SWPPP DETAILS FOR ADDITIONAL NOTES

EVERY DIGGING JOB REQUIRES A CALL – EVEN SMALL PROJECTS LIKE PLANTING TREES OR SHRUBS. IF YOU DIG WITHOUT CONTACTING UTILITY LINE BUILE DIGGING, YOU CAN HARM YOURSELF OR THOSE AROUND YOU, DISRUPT SERVICE TO AN ENTIRE NEIGHBORHOOD AND POTENTIALLY BE RESPONSIBLE FOR FINES AND REPAIR COSTS.

SMART DIGGING MEANS CALLING 811 BEFORE EACH JOB. WHEN YOU CALL, A HOMEOWNER OR A PROFESSIONAL EXCAVATOR. A FREE CALL TO 811 GETS YOUR UNDERGROUND UTILITY LINES MARKED FOR FREE.

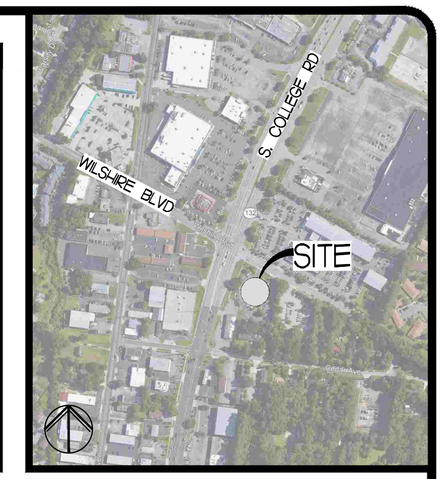

S.W.P.P. LEGEND

EXISTING	PROPOSED	DESCRIPTION
78	770	CONTOUR LINE
		STORM DRAIN LINE
	SF	SILT FENCE
		LIMITS OF DISTURBANCE
	P	INLET PROTECTION
		CONSTRUCTION ENTRANCE
	ArA	SOIL TYPE LABEL & BOUNDARY

CONSTRUCTION SEQUENCE

PHASE 1

1. NOTIFY NEW HANOVER COUNTY OF PENDING CONSTRUCTION PER PERMIT REQUIREMENTS, AND HOLD REQUIRED PRE-CONSTRUCTION MEETING. ALL CONTRACTORS MUST ATTEND THE PRE-CONSTRUCTION MEETING.
2. INSTALL CONSTRUCTION EXIT. REMOVE EXISTING IMPROVEMENTS ONLY AS NEEDED FOR INSTALLATION OF THE CONSTRUCTION EXIT.
3. CLEAR AND GRUB AS NECESSARY TO INSTALL PERIMETER CONTROLS, SILT FENCE, AND INLET PROTECTION.
4. ONCE PERIMETER CONTROLS, SILT FENCE, INLET PROTECTION AND CONSTRUCTION EXIT HAVE BEEN INSTALLED, BEGIN DEMOLITION OF EXISTING IMPROVEMENTS. DISPOSE OFF-SITE IN PROPER MANNER.
5. UPON COMPLETION BEGIN ROUGH GRADING OF THE SITE.

PHASE 2

1. CONSTRUCT BUILDING PAD.
2. INSTALL TEMPORARY SEEDING AND MULCH STABILIZATION TO ALL AREAS WHERE WORK WILL BE CEASED FOR A PERIOD OF MORE THAN 14 DAYS.
3. BEGIN STORM DRAIN & CONSTRUCTION. INSTALL INLET PROTECTION MEASURES AS EACH CATCH BASIN IS INSTALLED.
4. CONTINUALLY INSPECT AND MAINTAIN ALL BMP'S. REPAIR BMP'S AS NEEDED.
5. BEGIN BUILDING CONSTRUCTION.
6. APPLY PERMANENT SEEDING TO ALL AREAS AS SOON AS THEY ARE COMPLETE. DO NOT WAIT UNTIL JOB COMPLETION TO PERMANENTLY SEED DISTURBED AREAS.
7. INSTALL UTILITIES.
8. INSTALL CURB AND GUTTER AND FINE GRADE PARKING AREAS. STONE BASE SHALL BE INSTALLED IN ALL PAVED AREAS AS SOON AS PRACTICABLE. CONSTRUCTION EXIT SHALL BE REMOVED ONLY ONCE THE BUILDING PAD AND PARKING LOT HAVE BEEN STABILIZED WITH STONE BASE. PAVE SITE AND INSTALL APPROPRIATE INLET PROTECTION DEVICES FOR PAVED AREAS AS WORK PROGRESSES.
9. COMPLETE BUILDING CONSTRUCTION, SIDEWALKS, PLANTINGS, ETC.
10. REMOVE TEMPORARY BMP'S AS SOON AS THEIR CONTRIBUTING DRAINAGE AREAS HAVE BEEN STABILIZED. SEED AND MULCH ANY DISTURBANCE FROM REMOVAL OF TEMPORARY BMP'S.
11. CONTACT NEW HANOVER COUNTY FOR FINAL INSPECTION.

CITY OF WILMINGTON PLAN NOTES

1. PRIOR TO ANY CLEARING, GRADING OR CONSTRUCTION ACTIVITY, TREE PROTECTION FENCING SHALL BE INSTALLED AROUND PROTECTED TREES OR GROVES OF TREES. NO CONSTRUCTION WORKERS, TOOLS, MATERIALS, OR VEHICLES ARE PERMITTED WITHIN THE TREE PROTECTION FENCING.

2. ANY TREES AND/OR AREAS DESIGNATED TO BE PROTECTED MUST BE PROPERLY BARRICADED WITH FENCING AND PROTECTED THROUGHOUT CONSTRUCTION TO INSURE THAT NO CLEARING, GRADING OR STAGING OF MATERIALS WILL OCCUR IN THOSE AREAS.

3. NO EQUIPMENT IS ALLOWED ON SITE UNTIL ALL TREE PROTECTION FENCING AND SILT FENCING IS INSTALLED AND APPROVED. PROTECTIVE FENCING IS TO BE MAINTAINED THROUGHOUT THE DURATION OF THE PROJECT, AND CONTRACTORS SHALL RECEIVE ADEQUATE INSTRUCTION ON TREE PROTECTION METHODS.

4. CALL TRAFFIC ENFINEERING AT 910-341-7888 FORTY-EIGHT (48) HOURS PRIOR TO ANY EXCAVATION IN THE RIGHT-OF-WAY.

5. CONTACT THE NORTH CAROLINA ONE CALL CENTER AT 1-800-632-4949 PRIOR TO DOING ANY DIGGING, CLEARING, OR GRADING.

24 HOUR CONTACT: BRETT JARRETT, MVP PROPERTIES, 336-480-7173

SEDIMENT TUBE TO BE EROSION EEL OR APPROVED EQUAL

AFTER INSTALLATION, PERMEABLE PAVEMENT SHALL BE PROTECTED FROM SEDIMENT DEPOSITION UNTIL THE SITE IS COMPLETED AND STABILIZED. CONTRACTOR TO COORDINATED WITH ON-SITE TESTING AGENCY TO OBTAIN IN-SITU INFILTRATION PERMEABILITY TEST CERTIFIED & APPROVED BY CITY OF WILMINGTON AFTER SITE STABILIZATION

Approved Construction Plan

	Name	Date
Planning		
Traffic		
Fire		

SWPPP PHASE 2

SCALE 1" = 20'

REVISIONS	BY

FREELAND and KAUFFMAN, INC.
Engineers * Landscape Architects
209 West Stone Avenue
Greenville, South Carolina 29609
864-233-5497

PRELIMINARY NOT FOR CONSTRUCTION

AAA CAR WASH
WILMINGTON, NC
MPV PROPERTIES
2400 SOUTH BOULEVARD, #300
CHARLOTTE, NC 28203
(704)-248-2100

DRAWN	AJW
CHECKED	BTS
DATE	6/17/2019
SCALE	AS NOTED
DRAWING	13

PROJECT DESCRIPTION

THE PURPOSE OF THIS PROJECT IS TO CONSTRUCT A ±2,974 S.F. AAA CAR WASH, WITH ASSOCIATED PARKING AREAS, DRIVES, UTILITY SERVICES, STORM DRAINAGE AND LANDSCAPING. THE PROJECT IS LOCATED AT 911 SOUTH COLLEGE RD. IN WILMINGTON, NEW HANOVER COUNTY, NORTH CAROLINA.
THE SITE IS CURRENTLY DEVELOPED WITH ONE BUILDING LOCATED ON THE SITE. THE EXISTING STRUCTURE WILL BE REMOVED FOR THE NEW CAR WASH STRUCTURE.

PLANNED SEDIMENT AND EROSION CONTROL PRACTICES

1. STONE CONSTRUCTION ENTRANCE / EXIT

A TEMPORARY STONE CONSTRUCTION ENTRANCE WILL BE INSTALLED AND OPERATIONAL THROUGHOUT CONSTRUCTION. THE CONSTRUCTION ENTRANCE SHALL BE LOCATED AT THE PERMANENT ENTRANCE DRIVE INTO THE PROPERTY, ACCESSED BY NC HWY 226 (AS SHOWN ON THE EROSION & SEDIMENTATION CONTROL PLANS). VEHICLE TIRES SHALL BE WASHED AT THIS LOCATION AS NEEDED TO PREVENT TRACK-OUT. THE ENTRANCE WILL BE GRADED SO THAT RUNOFF IS DIRECTED TO THE A DEDICATED SEDIMENT TRAP FOR THE WASH WATER (IF A TIRE WASH IS REQUIRED), AWAY FROM ADJOINING PROPERTIES.

2. STORM DRAIN INLET PROTECTION

STORM DRAIN INLET PROTECTION WILL BE INSTALLED IN ACCORDANCE WITH THE EROSION AND SEDIMENTATION CONTROL DETAILS, AND MAINTAINED THROUGHOUT CONSTRUCTION. ONCE GENERAL PAVING IS COMPLETE, THE CONTRACTOR SHALL INSTALL BLOCK AND GRAVEL (OR ALTERNATE APPROVED) INLET PROTECTION AT ALL STORM DRAIN INLETS. NO STORM DRAINAGE INLET SHALL BE MADE OPERATIONAL PRIOR TO ADEQUATE INLET PROTECTION BEING INSTALLED.

3. SEDIMENT FENCE

SEDIMENT FENCE WILL BE INSTALLED AS SHOWN ON ALL PHASES OF THE EROSION AND SEDIMENTATION CONTROL PLANS. ALL SEDIMENT FENCE USED ON THIS PROJECT WILL BE WIRE-REINFORCED PER THE STANDARD DETAIL.

SEQUENCE OF CONSTRUCTION

REFER TO THE EROSION & SEDIMENTATION CONTROL PLANS (PHASES 1 AND 2) FOR THE COMPLETE SEQUENCE OF CONSTRUCTION.

BMP MAINTENANCE NOTES:

ALL MEASURES STATED ON THIS SITE MAP, AND IN THE STORM WATER POLLUTION PREVENTION PLAN, SHALL BE MAINTAINED IN FULLY FUNCTIONAL CONDITION UNTIL NO LONGER REQUIRED FOR A COMPLETED PHASE OF WORK OR FINAL STABILIZATION OF THE SITE. ALL EROSION AND SEDIMENTATION CONTROL MEASURES SHALL BE CHECKED BY A QUALIFIED PERSON IN ACCORDANCE WITH THE CONTRACT DOCUMENTS OR THE APPLICABLE PERMIT, WHICHEVER IS MORE STRINGENT, AND REPAIRED IN ACCORDANCE WITH THE FOLLOWING:

A. INLET PROTECTION DEVICES AND BARRIERS SHALL BE REPAIRED OR REPLACED IF THEY SHOW SIGNS OF UNDERMINING OR DETERIORATION.

B. ALL SEEDED AREAS SHALL BE CHECKED REGULARLY TO SEE THAT A GOOD STAND IS MAINTAINED. AREAS SHOULD BE FERTILIZED, WATERED, AND RE-SEEDED AS NEEDED.

C. SILT FENCES SHALL BE REPAIRED TO THEIR ORIGINAL CONDITIONS IF DAMAGED. SEDIMENT SHALL BE REMOVED FROM THE SILT FENCES WHEN IT REACHES ONE-THIRD THE HEIGHT OF THE SILT FENCE.

D. THE CONSTRUCTION EXITS SHALL BE MAINTAINED IN A CONDITION WHICH WILL PREVENT TRACKING OR FLOW OF MUD ONTO PUBLIC RIGHTS-OF-WAY. THIS MAY REQUIRE PERIODIC TOP DRESSING OF THE CONSTRUCTION EXITS AS CONDITIONS DEMAND.

E. THE TEMPORARY PARKING AND STORAGE AREA SHALL BE KEPT IN GOOD CONDITION (SUITABLE FOR PARKING AND STORAGE). THIS MAY REQUIRE PERIODIC TOP DRESSING OF THE TEMPORARY PARKING AREA AS CONDITIONS DEMAND.

F. PRIOR TO LEAVING THE SITE, ALL VEHICLES SHALL BE CLEANED OF DEBRIS. ANY DEBRIS AND/OR SEDIMENT REACHING THE PUBLIC STREET SHALL BE CLEANED IMMEDIATELY BY A METHOD OTHER THAN FLUSHING.

STORMWATER POLLUTION PREVENTION PLAN:

THE STORMWATER POLLUTION PREVENTION PLAN (SWPPP) FOR THIS PROJECT IS COMPRISED OF THE NPDES GENERAL PERMIT FOR CONSTRUCTION ACTIVITIES (NCG010000) AND THE EROSION & SEDIMENTATION CONTROL PLANS, AS APPROVED BY NC DENR. CONTRACTOR SHALL FAMILIARIZE HIMHERSELF WITH THESE DOCUMENTS AND SHALL MAINTAIN COMPLIANCE WITH THE SWPPP AT ALL TIMES.

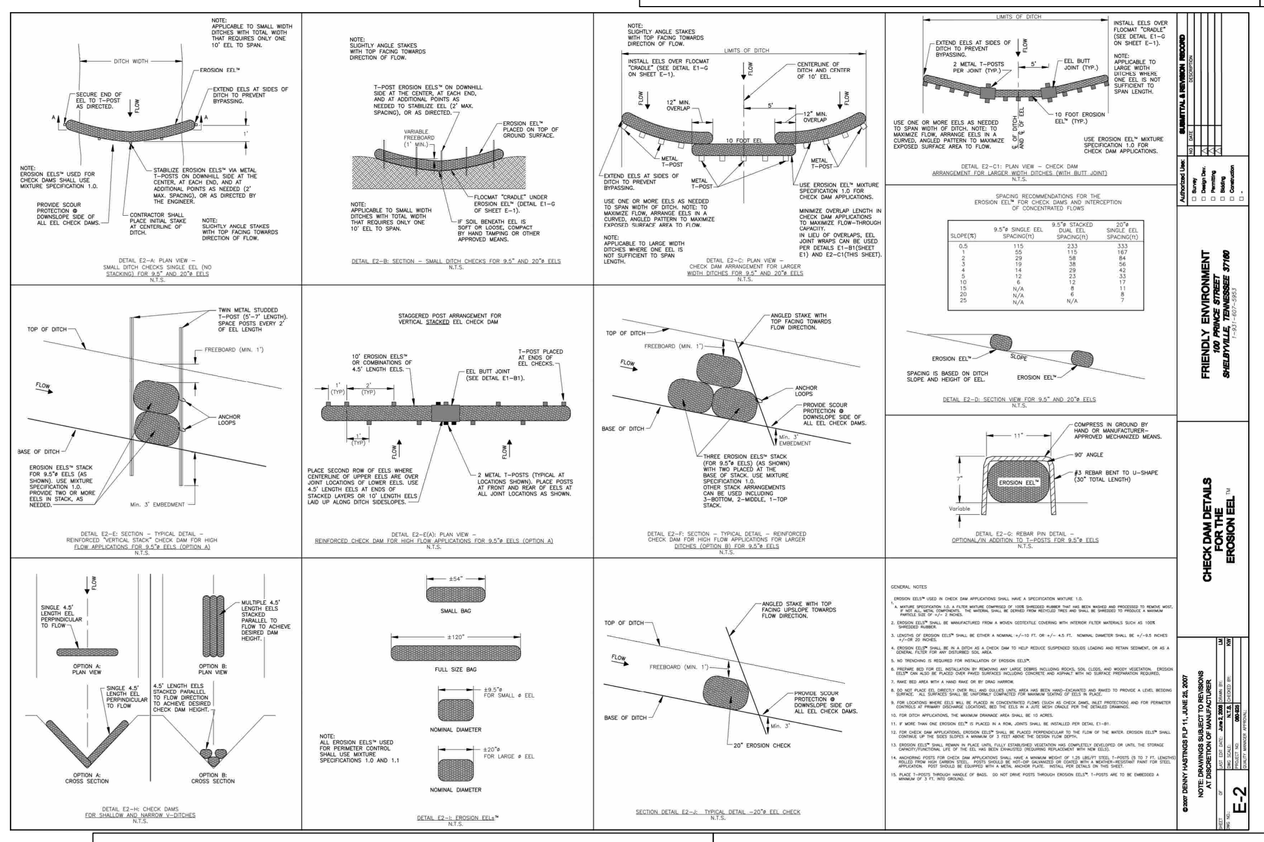

Practice Standards and Specifications

6.52 Block and Gravel inlet protection (temporary)

Definition A sediment control barrier formed around a storm drain inlet by the use of standard concrete block and gravel.

Purpose To help prevent sediment from entering storm drains before stabilizing the contributing watershed. This practice allows early use of the storm drain system.

Conditions Where Practice Applies Where storm drain inlets are to be made operational before permanent stabilization of the disturbed drainage area. This method of inlet protection applies to both drop inlets and curb inlets where heavy flows are expected, and an overflow capacity is necessary to prevent excessive ponding around the structure. Shallow temporary flooding after rainfall should be expected, however.

This practice must not be used near the edge of fill material, and must not divert water away from the storm drain.

Design Criteria Keep the drainage area no greater than 1 acre unless site conditions allow for frequent removal and adequate disposal of accumulated sediment.

Keep the height of the barrier at least 12 inches and no greater than 24 inches. Do not use mortar. Limit the height to prevent excess ponding and bypass flow.

Recess the first course of blocks at least 2 inches below the crest opening of the storm drain for lateral support. Support subsequent courses laterally if needed by placing a 2 x 4-inch wood stud through the block openings that are perpendicular to the block course needing support. Lay some blocks on their side in the bottom row for dewatering the pool (Figure 6.52a).

Place gravel just below the top of the blocks on slopes of 2:1 or flatter. Place hardware cloth or comparable wire mesh with 1/2-inch openings over all block openings to hold gravel in place.

The top elevation of the structure must be at least 6 inches lower than the ground elevation downslope from the inlet. It is important that all storm flows pass over the structure and into the storm drain and not past the structure. Temporary diking below the structure may be necessary to prevent bypass flow. Material may be excavated from inside the sediment pool for this purpose.

6.52.1

6

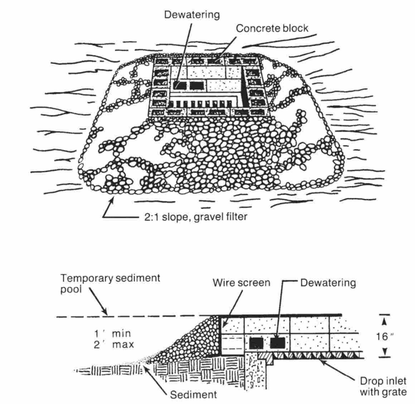

Figure 6.52a Block and gravel drop inlet protection.

Construction Specifications

1. Lay one block on each side of the structure on its side in the bottom row to allow pool drainage. The foundation should be excavated at least 2 inches below the crest of the storm drain. Place the bottom row of blocks against the edge of the storm drain for lateral support and to avoid washouts when overflow occurs. If needed, give lateral support to subsequent rows by placing 2 x 4 wood studs through block openings.
2. Carefully fill hardware cloth or comparable wire mesh with ½-inch openings over all block openings to hold gravel in place.
3. Use clean gravel, ¾- to ½-inch in diameter, placed 2 inches below the top of the block on a 2:1 slope or flatter and smooth it to an even grade. DOT #57 washed stone is recommended.

6.52.2

Practice Standards and Specifications

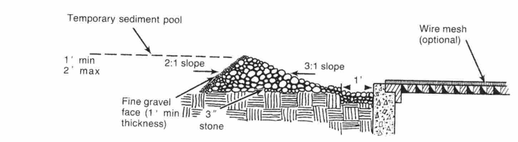

Figure 6.52b Gravel drop inlet protection (gravel donut).

4. If only stone and gravel are used, keep the slope toward the inlet no steeper than 3:1. Leave a minimum 1-foot wide level stone area between the structure and around the inlet to prevent gravel from entering inlet. On the slope toward the inlet, use stone 3 inches in diameter or larger. On the slope away from the inlet use ½ - ¾-inch gravel (NCDOT #57 washed stone) at a minimum thickness of 1 foot.

Maintenance Inspect the barrier at least weekly and after each significant (½ inch or greater) rainfall and make repairs as needed.

Remove sediment as necessary to provide adequate storage volume for subsequent rains.

When the contributing drainage area has been adequately stabilized, remove all materials and any unstable soil, and either salvage or dispose of it properly. Bring the disturbed area to proper grade, then smooth and compact it. Appropriately stabilize all bare areas around the inlet.

References *Inlet Protection*
6.50, Excavated Drop Inlet Protection (Temporary)
6.51, Hardware Cloth, and Gravel Inlet Protection (Temporary)

North Carolina Department of Transportation
Standard Specifications for Roads and Structures

Rev. 6/06 6.52.3

Practice Standards and Specifications

6.51 HardWare cloth & Gravel inlet protection

Definition A temporary measure of wire-mesh hardware cloth around steel posts supporting washed stone placed around the opening of a drop inlet.

Purpose To prevent sediment from entering yard inlets, grated storm drains or drop inlets during construction. This practice allows early use of the storm drain system.

Conditions Where Practice Applies To be placed around a catch basin or a drop inlet and where the flow is light to moderate. If heavy flow is anticipated, use the rock doughnut inlet protection method (Practice 6.54, *Rock Doughnut Inlet Protection*). It is also used where storm drain inlets are to be made operational before permanent stabilization of the disturbed drainage area. This method of inlet protection is effective where the inlet is expected to drain shallow sheet flow. The immediate land area around the inlet should be relatively flat (less than 1 percent) and located so that accumulated sediment can be easily removed.

This practice must not be used near the edge of fill material and must not divert water over cut or fill slopes.

Design Criteria Ensure that drainage areas do not exceed 1 acre per inlet.

For securing the wire mesh hardware cloth barriers, use steel T posts. The posts need to be 1.25 lb/linear ft steel with a minimum length of 5 feet. Make sure the posts have projections to facilitate fastening the hardware cloth. Securely drive each stake into the ground to a minimum depth of 2 feet. The maximum spacing for the posts is 4 feet.

The wire mesh should be at least a 19-gauge hardware cloth with a ¼ inch mesh opening. The total height should be a minimum of 2 feet. Providing a flap of hardware cloth on the ground projecting away from the inlet can aid in removal of the stone at the project's completion. The sediment control stone, with a height of 16 inches, should have a outside slope of 2:1.

The top elevation of the structure must be at least 12 inches lower than the ground elevation downslope from the inlet. It is important that all storm flows pass over the structure into the storm drain and not bypass the structure. Temporary dikes below the structure may be necessary to prevent bypass flow. Soil excavated when constructing the sediment pool may be used for this purpose (Figure 6.51a).

Rev. 6/06 6.51.1

6

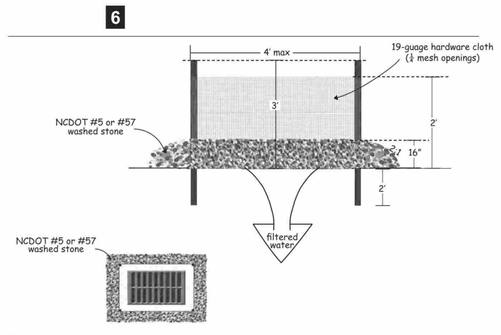

Figure 6.51a Hardware cloth and gravel inlet protection

Construction Specifications

1. Uniformly grade a shallow depression approaching the inlet.
2. Drive 5-foot steel posts 2 feet into the ground surrounding the inlet. Space posts evenly around the perimeter of the inlet, a maximum of 4 feet apart.
3. Surround the posts with wire mesh hardware cloth. Secure the wire mesh to the steel posts at the top, middle, and bottom. Placing a 2-foot flap of the wire mesh under the gravel for anchoring is recommended.
4. Place clean gravel (NC DOT #5 or #57 stone) on a 2:1 slope with a height of 16 inches around the wire, and smooth to an even grade.
5. Once the contributing drainage area has been stabilized, remove accumulated sediment, and establish final grading elevations.
6. Compact the area properly and stabilized it with groundcover.

Maintenance Inspect inlets at least weekly and after each significant (½ inch or greater) rainfall event. Clear the mesh wire of any debris or other objects to provide adequate flow for subsequent rains. Take care not to damage or undercut the wire mesh during sediment removal. Replace stone as needed.

References *Inlet Protection*
6.52, Block and Gravel Inlet Protection
6.54, Rock Doughnut Inlet Protection

North Carolina Department of Transportation
Standard Specifications for Roads and Structures

6.51.2 Rev. 6/06

Practice Standards and Specifications

6.06 TEMPORARY GRAVEL CONSTRUCTION ENTRANCE/EXIT

Definition A graveled area or pad located at points where vehicles enter and leave a construction site.

Purpose To provide a buffer area where vehicles can drop their mud and sediment to avoid transporting it onto public roads, to control erosion from surface runoff, and to help control dust.

Conditions Where Practice Applies Wherever traffic will be leaving a construction site and moving directly onto a public road or other paved off-site area. Construction plans should limit traffic to properly constructed entrances.

Design Criteria **Aggregate Size** – Use 2-3 inch washed stone.

Dimensions of gravel pad—
Thickness: 6 inches minimum
Width: 12-feet minimum or full width at all points of the vehicular entrance and exit area, whichever is greater
Length: 50-feet minimum

Location—Locate construction entrances and exits to limit sediment from leaving the site and to provide for maximum utility by all construction vehicles (Figure 6.06a). Avoid steep grades, and entrances at curves in public roads.

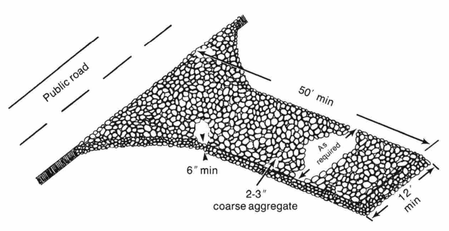

Figure 6.06a Gravel entrance/exit keeps sediment from leaving the construction site (modified from Va SWCC).

6.06.1

6

Construction Specifications

Washing—If conditions at the site are such that most of the mud and sediment are not removed by vehicles traveling over the gravel, the tires should be washed. Washing should be done on an area stabilized with crushed stone that drains into a sediment trap or other suitable disposal area. A wash rack may also be used to make washing more convenient and effective.

1. Clear the entrance and exit area of all vegetation, roots, and other objectionable material and properly grade it.
2. Place the gravel to the specific grade and dimensions shown on the plans, and smooth it.
3. Provide drainage to carry water to a sediment trap or other suitable outlet.
4. Use geotextile fabrics because they improve stability of the foundation in locations subject to seepage or high water table.

Maintenance Maintain the gravel pad in a condition to prevent mud or sediment from leaving the construction site. This may require periodic topdressing with 2-inch stone. After each rainfall, inspect any structure used to trap sediment and clean it out as necessary. Immediately remove all objectionable materials spilled, washed, or tracked onto public roadways.

References *Runoff Conveyance Measures*
6.30, Grass-lined Channels

Sediment Traps and Barriers
6.60, Temporary Sediment Trap

6.06.2

1. GROUND STABILIZATION

SITE AREA DESCRIPTION	STABILIZATION TIME FRAME	STABILIZATION TIME FRAME EXCEPTIONS
PERIMETER DIKES, SWALES, DITCHES, AND SLOPES	7 DAYS	NONE
HIGH QUALITY WATER (HQW) ZONES	7 DAYS	NONE
SLOPES STEEPER THAN 3:1	7 DAYS	IF SLOPES ARE 10' OR LESS IN LENGTH AND ARE NOT STEEPER THAN 2:1, 14 DAYS ARE ALLOWED
SLOPES 3:1 OR FLATTER	14 DAYS	7 DAYS FOR SLOPES GREATER THAN 50 FEET IN LENGTH
ALL OTHER AREAS WITH SLOPES FLATTER THAN 4:1	14 DAYS	NONE (EXCPET FOR PERIMETERS AND HQW ZONES)

2. BUILDING WASTES HANDLING

1. NO PAINT OR LIQUID WASTES IN STREAM OR STORM DRAINS.
2. DEDICATED AREAS FOR DEMOLITION, CONSTRUCTION AND OTHER WASTES MUST BE LOCATED 50' FROM STORM DRAINS AND STREAMS UNLESS NO REASONABLE ALTERNATIVES AVAILABLE.
3. EARTHEN-MATERIALS STOCKPILES MUST BE LOCATED 50' FROM STORM DRAINS AND STREAMS UNLESS NO REASONABLE ALTERNATIVES AVAILABLE.
4. CONCRETE MATERIALS MUST BE CONTROLLED TO AVOID CONTACT WITH SURFACE WATERS, WETLANDS, OR BUFFERS.

3. INSPECTIONS

1. SAME WEEKLY INSPECTION REQUIREMENTS.
2. SAME RAIN GAUGE & INSPECTIONS AFTER 0.5" RAIN EVENT.
3. INSPECTIONS ARE ONLY REQUIRED DURING "NORMAL BUSINESS HOURS".
4. INSPECTION REPORTS MUST BE AVAILABLE ON-SITE DURING BUSINESS HOURS UNLESS A SITE-SPECIFIC EXEMPTION IS APPROVED.
5. RECORDS MUST BE KEPT FOR 3 YEARS AND AVAILABLE UPON REQUEST.
6. ELECTRONICALLY AVAILABLE RECORDS MAY BE SUBSTITUTED UNDER CERTAIN CONDITIONS.

4. SEDIMENT BASINS

1. OUTLET STRUCTURES MUST WITHDRAW FROM BASIN SURFACE UNLESS DRAINAGE AREA IS LESS THAN 1 ACRE.
2. USE ONLY DWQ-APPROVED FLOCCULENTS.

NPDES - SPECIFIC PLAN SHEETS NOTES

1. THIS PAGE IS SUBMITTED TO COMPLY WITH NPDES GENERAL STORMWATER PERMIT NCG010000.
2. THIS PAGE CAN BE APPROVED BY THE COUNTY PURSUANT TO NPDES GENERAL STORMWATER PERMIT NCG010000 ONLY.
3. THIS PAGE OF THE APPROVED PLANS IS ENFORCEABLE EXCLUSIVELY PURSUANT TO NPDES GENERAL STORMWATER PERMIT NCG010000.
4. THE COUNTY IS NOT AUTHORIZED TO ENFORCE THIS PAGE OF THE PLANS AND IT IS NOT A PART OF THE APPROVED PLANS FOR THE PURPOSES OF ENFORCEMENT ACTION UNDER THE COUNTY CODE.

Approved Construction Plan
Name Date
Planning
Traffic
Fire

SWPPP DETAILS
1 OF 5

REVISIONS	BY

FREELAND and KAUFFMAN, INC.
Landscape Architects
209 West Stone Avenue
Greenville, South Carolina 29609
864-233-5497

PRELIMINARY NOT FOR CONSTRUCTION

AAA CAR WASH
WILMINGTON, NC
MPV PROPERTIES
2400 SOUTH BOULEVARD, #300
CHARLOTTE, NC 28203
(704)-248-2100

DRAWN AJW
CHECKED BTS
DATE 6/17/2019
SCALE AS NOTED
DRAWING 14

6.11

PS

PERMANENT SEEDING

Definition Controlling runoff and erosion on disturbed areas by establishing perennial vegetative cover with seed.

Purpose To reduce erosion and decrease sediment yield from disturbed areas, to permanently stabilize such areas in a manner that is economical, adapts to site conditions, and allows selection of the most appropriate plant materials.

Conditions Where Practice Applies Fine-graded areas on which permanent, long-lived vegetative cover is the most practical or most effective method of stabilizing the soil. Permanent seeding may also be used on rough-graded areas that will not be brought to final grade for a year or more.

Areas to be stabilized with permanent vegetation must be seeded or planted within 15 working days or 90 calendar days after final grade is reached, unless temporary stabilization is applied.

Introduction During the initial phase of all land disturbing projects, the protective layer, either natural or man-made, is removed from the earth's surface. As the protective layer is removed, the resulting bare areas are exposed to the natural forces of rainfall, freezing, thawing, and wind. The result is soil erosion that leads to sediment pollution of North Carolina streams, rivers, lakes, and estuaries.

This design manual presents many alternative strategies for preventing erosion and reducing sediment loss during the construction process. Establishment of protective vegetative cover during the construction project, however, is the crucial step in achieving soil stabilization, controlling soil erosion, and preventing sedimentation of waterways. Without a sufficient amount of root mat and leaf cover to protect and hold the soil in place, large volumes of soil will be lost and waterways will be degraded long after projects are considered complete.

Sections of this practice standard address many of these various situations and set forth selection criteria for the appropriate cover based on purpose and adaptability. Some sediment and erosion control practices recommended in earlier editions of the manual may no longer be applicable. For example, many popular and commonly used seed and plant varieties have been identified as invasive. Invasive plants are defined as species that aggressively compete with, and displace, locally adapted native plant communities. In select cases where no practical alternative is available, these plants may be considered on a limited basis for soil stabilization, understanding that the goal is to eliminate the use of all invasive plants in favor of non-invasive native and/or introduced species that will provide an equally acceptable vegetative cover. Where there is no alternative to the use of invasive species, measures need to be incorporated in the installation and maintenance of these plants to limit their impacts.

It is imperative that disturbed soils be totally protected from erosion and sediment loss during construction and before a project is considered complete and acceptable. Installing appropriate vegetation in an immediate and timely fashion is the optimal means of achieving this stabilization. Vegetative specifications for most exposed soil conditions across North Carolina are provided in this section of the manual. It should be noted however, that no two sites in the State are exactly alike; therefore the protective vegetative cover for individual sites should be carefully selected. Each requires its own investigation, analysis, design and vegetative prescription as set forth in this section of the manual.

This practice standard describes three stages of vegetative cover; immediate, primary and long term. Effective and acceptable stabilization can be provided only when the optimum combination of immediate, primary, and long term vegetative practices are applied.

The vegetative measures presented in this chapter include application of seed, sod and sprigs. Use of field and container grown plants are not addressed in this manual. Planting of these types of vegetation is typically at spacing and intervals that will not provide the required protective cover. However, the design professional is encouraged to utilize these larger plants to compliment the required protective cover, particularly where these types of plants will provide seed for continued long term cover and wildlife habitat.

PLANNING CONSIDERATIONS

SOILS

Test and analyze the type(s) and quality of the existing soils on a site, their pH ranges, and their nutrient levels. Taking soil samples from the different areas of the project site and having them tested at a state or independent lab will provide a baseline for determining the pH modifiers and additional nutrients required for the selected plant varieties.

Disturbed conditions on a site may produce a variety of soil communities. Nutrient and pH levels in deeply cut soils will be quite different from those soils found on the original surface. When sites are highly disturbed through mechanical means such as grading, the soils become mixed together in many different ratios. These areas should be identified and tested.

Results from soil tests will usually include recommended application rates of soil modifiers such as lime and fertilizer for the selected plant species in the particular soils. Application rates will be itemized in the report.

The texture of the soil on a site, which is the proportion of sand, silt, and clay in the soil, is an important physical indicator of the site's ability to support vegetation. In heavy clay soils amendments may be necessary to provide an adequately drained planting medium. Conversely, in extremely sandy soils, amendments may be required to provide for moisture and nutrient retention.

Soil tests will indicate the texture of the given soil but will not provide recommendations for amendments that will improve the soil texture. Generally, the addition of organic materials will improve the porosity of heavy clay soils and improve the water holding capacity of extremely sandy soils. On sites where these different soil conditions exist, it is recommended that a design professional with experience in soil modification be employed to recommend the proper amendments.

For more information visit the NCDA Agronomic Services Soil Testing web page http://www.agr.state.nc.us/agronomic/sthome.htm

SOIL PREPARATION

Proper soil preparation is necessary for successful seed germination and root establishment. It is also necessary for establishment of rooted sprigs, sod and woody plants. Heavily compacted soils prevent air, nutrients and moisture from reaching roots thereby retarding or preventing plant growth. The success of site stabilization and reduction of future maintenance are dependent on an adequately prepared soil bed. Following are the requirements for preparation of areas to be vegetated by grassing, sprigging, sodding, and/or planting of woody plants:

General Requirements:

- Preparation for primary/permanent stabilization shall not begin until all construction and utility work within the preparation area is complete. However, it may be necessary to prepare for nurse crops prior to completion of construction and installation of utilities.
- A North Carolina Department of Agriculture Soils Test (or equal) shall be obtained for all areas to be seeded, sprigged, sodded or planted. Recommended fertilizer and pH adjusting products shall be incorporated into the prepared areas and backfill material per the test.
- All areas to be seeded or planted shall be tilled or ripped to a depth specified on the approved plans, construction sequence and/or construction bid list. Ripping consists of creating fissures in a criss-cross pattern over the entire surface area, utilizing an implement that will not glaze the side walls of the fissures. Site preparation that does not comply with these documents shall not be acceptable. The depth of soil preparation may be established as a range based on the approval of the reviewing state or local agency. Once tilled or ripped according to the approved plan, all areas are to be returned to the approved final grade. pH modifiers and/or other soil amendments specified in the soil tests can be added during the soil preparation procedure or as described below.
- All stones larger than three (3) inches on any side, sticks, roots, and other extraneous materials that surface during the bed preparation shall be removed.

Areas to be Seeded:

- Till or disc the prepared areas to be seeded to a minimum depth of four (4) inches. Remove stones larger than three (3) inches on any side, sticks, roots and other extraneous materials that surface. If not incorporated during the soil preparation process, add pH modifier and fertilizers at the rate specified in the soil test report.
- Re-compact the area utilizing a cultipacker roller. The finished grade shall be a smooth even soil surface with a loose, uniformly fine texture. All ridges and depressions shall be removed and filled to provide the approved surface drainage. Seeding of graded areas is to be done immediately after finished grades are obtained and seedbed preparation is completed.

Areas to be Sprigged, Sodded, and/or Planted:

- At the time of planting till or disc the prepared areas to a depth of four (4) to six (6) inches below the approved finished grade. Remove all stones larger than three (3) inches on any side, sticks, roots and other extraneous materials that surface. If not incorporated in the ripping process, add pH modifier, fertilizer, and other recommended soil amendments.
- Re-compact the area utilizing a cultipacker roller and prepare final grades as described above. Install sprigs, sod and plants as directed immediately after fine grading is complete. Mulch, mat and/or tack as specified.

VEGETATION

Availability of seed and plant materials is an important consideration of any construction stabilization effort. Throughout North Carolina, climate, economics, construction schedule delays and accelerations, and other factors present difficult challenges in specifying the different vegetation needed for site stabilization. To help resolve this issue, vegetative stabilization requires consideration in three categories:

- ■ Immediate Stabilization – nurse crop varieties (Note: temporary mulching may be utilized for immediate stabilization if outlined on the approved plans and construction sequence.)
- ■ Primary Stabilization – plant varieties providing cover up to 3 years with a specified maintenance program
- ■ Long Term Stabilization – plant varieties providing protective cover with maintenance levels selected by the owner

An adequate job in one of these areas does not guarantee success in the later phases. Horticultural maintenance must be included in the plans.

Immediate vegetative cover will always require additional fertilization, soil amendments, soil tests, overseeding and/or other horticultural maintenance until primary vegetative cover is established.

Where provisions are made for regular maintenance, primary vegetative cover may be the end result. An example of primary vegetative cover being acceptable as an end use would be lawns in residential and commercial developments that are established, monitored and complimented with regular and approved horticultural maintenance practices. (See Example 6.11.a.)

In projects where continual maintenance will not be provided or scheduled following the primary stabilization of a project, long-term stabilization will be necessary. Maintenance of initial and long-term stabilization can cease only after the long-term cover has established and hardened to local climatic conditions. Maintenance of long-term vegetation must be included in the project construction sequence and on the approved plans. Examples of areas suitable for long term vegetation include roadsides, reforestation areas, restored flood plains, restored riparian areas, phased closing of landfills, and mining reclamations.

Complete stabilization requires using at least two, and most times, all three vegetative phases. The design professional must clearly communicate this point in their specifications, construction sequence, and in direct communications to owners and installers. The charts in tables 6.11.a through 6.11.d provide information to assist the design professional in this task. The tables are not inclusive and are presented only as alternatives. The professional is expected and required to provide design and specifications that combine the information in the manual with knowledge of the particular sites and their constraints.

pH AND NUTRIENT AMENDMENTS

Determining the nutrients that enable seed and container plants to grow, flourish, and become established after planting are critical elements of the design and stabilization process. The soils tests previously described will provide a recipe for amendments based on particular plants and particular soils. The test results will recommend the amounts of base elements (nitrogen, phosphorous, potassium) pH modifiers and other trace elements that should to be added to the soil for selected species of seeds and plants.

The acid/base characteristic of the soil is a primary component of soil fertility. If the soil acidity is not in the proper range, other nutrients will be ineffective, resulting in less productive plant growth. Most plants grow best in a pH range of 6.5 – 7.0 (slightly acidic to neutral). The soil tests will recommend the specific amendments and application rates required to achieve this range. These amendments must be incorporated into the soil (not applied on the surface) to be effective. (See the General Requirements for soil preparation specifications and timing for incorporation of soil amendments.)

The base elements are easily found in bulk quantities. Lime can also be obtained in large quantities. They will must be thoroughly incorporated into the soil through appropriate mechanical means. Ground surface applications without proper soil mixing will result in poor results.

In addition to the base fertilizers, other trace elements are needed to produce healthy and vigorous growth. These include but may not be limited to sulfur, manganese, zinc, boron, chlorine and molybdenum. If not already included with bulk mixes of the base elements, they can be obtained from commercial suppliers.

Provisions for soils test during and/or after initial grading is complete shall be included on the approved plan, in the approved construction sequence, and on the bid item list utilized for the project. *If you did not obtain a soil test:* Follow these recommendations for all grasses except centipedegrass.

1. Apply 75 pounds of ground limestone per 1,000 sq. ft.
2. Apply a starter type fertilizer (one that is high in phosphorus) based on the type of grass and planting method. Fertilizer bags have a three-number system indicating the primary nutrients, such as 8-8-8 or 5-10-10. These numbers denote the N-P-K ratio—the percentage of each nutrient in a fertilizer. The percentages are always noted in the following order:
N Nitrogen for green color and growth.
P_2O_5 Phosphorus for good establishment and rooting.
K_2O Potassium to enhance pest and environmental stress tolerance.

Some common examples of starter type fertilizers required for a 1,000 sq. ft. area include 40 pounds of 5-10-10, 20 pounds of 10-20-20, or 16 pounds of 18-24-6. For sandy soils, typical to coastal plain and sandhills of North Carolina, fertilizer rates should be increased by 20 percent.

Where available, it is recommended that the design professional specify organic compounds that meet the fertilization requirements, pH and other element requirements. Initial studies have indicated that these compounds have a more positive effect on the environment than some of the synthetic compounds used to manufacture inorganic fertilizers. These materials are readily available in the commercial trade as well as found in recycled yard waste debris, sewerage sludge, lime-stabilized sludge and animal manures. Materials proposed for use must be industry certified and/or privately tested and certified to be acceptable for proposed areas of use and application prior to approval.

MULCHES AND TACKING AGENTS

Mulches and tacking agents may be required or necessary to protect a seedbed's disturbed surface until the seed can germinate and provide the required protection from erosion. Selection of the materials used in this application should be based on their ability to hold moisture in the soil, as well as protect exposed soil from rainfall, storm water runoff, and wind. The availability of the selected material and the means to apply it are critical factors to consider when planning for the stabilization of any disturbed area. The mulch must cover a minimum of eighty (80) percent of the soil surface and must be secured by a tacking agent, crimping, or protective biodegradable netting. Netting that incorporates plastic mesh and/or plastic twine should not be used in wetlands, riparian buffers or floodplains due to the potential of small animal mortality. See Section 6.14 for detailed specifications and product applications.

SOIL BLANKETS

Soil blankets can be an acceptable and effective method of temporary sediment and erosion control in lieu of nurse crops. See Section 6.17 of the manual for descriptions of this product and how it can be used in conjunction with this section. In absence of mulches and tracking agents other means of protection may be necessary and required.

PROTECTIVE MATTING

Protective matting consists of an impervious cover secured to the soil surface in lieu of vegetative cover. It is used to protect and stabilize the surface where the process of seeding or planting forms of vegetation may cause more erosion and off-site sedimentation than application of the mat. It is also used where a disturbed area is intended to lay fallow for a period of time before additional construction or land disturbance takes place. If a pervious matting is selected, a combination of vegetation and matting is required. Seeds can be applied prior to installation of the matting only after proper seedbed preparation has been provided. Also, live stakes, dormant sprigs, and other vegetation forms can be inserted in the pervious matting once it has been installed. Pre-seeded pervious matting may be used for quicker root establishment and stabilization only if certified dating and germination guarantees are provided. The reviewing agency must approve all pre-seeded matting on site prior to installation. Matting that incorporates plastic mesh and/or plastic twine should not be used in wetlands, riparian buffers or floodplains due to the potential of small animal mortality. See Section 6.17 for detailed specifications and recommended product applications.

STABILIZATION IN WETLANDS, RIPARIAN BUFFERS, AND FLOODPLAINS

Land disturbing activity involving streams, wetlands or other waterbodies may also require permitting by the U.S. Army Corps of Engineers or the N.C. Division of Water Quality. Approval of an erosion and sedimentation control plan is conditioned upon the applicant's compliance with federal and State water quality laws, regulations, and rules. Additionally, a draft plan should be disapproved if implementation of the plan would result in a violation of rules adopted by the Environmental Management Commission to protect riparian buffers along surface waters. Care should be taken in selecting vegetative stabilization of wetlands and riparian buffers to comply with permitting requirements of other agencies, as well as provide adequate ground cover.

Planning Considerations for Land Disturbing Activities Within Wetland, Riparian, and Floodplain Areas

Wetlands, riparian areas, floodplains, and/or terrestrial areas between streams and uplands, serve to buffer surface water and provide habitat for aquatic and terrestrial flora and fauna. When cleared and disturbed, these sensitive areas are difficult to protect. Because of their proximity to water courses, relatively high ground water tables, and flooding potential, detailed analysis and design is necessary to determine the appropriate erosion control measures during construction. Determining the appropriate and most expeditious means of permanent vegetative stabilization in these areas requires equally detailed analysis and design. The following considerations for erosion control and stabilization should be taken into account during the design phase of the land disturbing project where sensitive areas are involved:

- Obtain soil tests to determine the soil type, pH, texture and available nutrients.
- Based on the soil tests provide a schedule of nutrients and other soil amendments that will be required.

- Select a seeding mix of non-invasive species that will provide immediate stabilization (a short-term environment that will support and compliment permanent vegetative stabilization) and include a selective native species mix that will eventually provide a permanent cover (a long-term environment that, with minimal maintenance, will provide adequate root and leaf cover).
- Invasive species are to be avoided. If native species and introduced non-invasive seed sources are not available, protective matting that will hold and foster the development of native cover from adjacent seed sources should be used. Continuous maintenance must be employed until the selected species have matured and are no longer susceptible to competition from invasive plants. If no alternative to the use of invasive seeds and plants is available, invasives approved on the plans may be utilized only with strict containment measures outlined in detail on the plans, in the construction sequence and in the maintenance specifications.
- A quickly germinating nurse crop of non-invasive, non-competitive annual grass species can be used along with native seeding and/or matting. These temporary systems should be planted at minimal rates so that they do not inhibit the growth and establishment of the permanent, native species. (See the plant chart in Table 6.11.a for recommended native and nurse crop species.)
- Seed bed preparation is key to successful establishment of seeds. Particular care should be taken, however, when working in wetlands, riparian areas, or floodplains due to their sensitive nature. Careful consideration should be given to the types and placement of large equipment working in these areas. This process must be outlined in detail on the plan's construction sequence.
- Installation techniques vary and should be planned for accordingly.
- A maintenance plan must be established for optimal plant establishment, submitted with the plans and included in the bid list for the project.

Like all construction sites, wetlands, riparian areas, and floodplains will vary widely in physical makeup across North Carolina. Different conditions will dictate specific treatment, design and plant selection within the Mountains, Piedmont, and Coastal Plain regions. Soil tests, seedbed preparation, mulching, matting, and maintenance will be critical for successful vegetative establishment and long-term protection of these environmentally sensitive areas. Unavoidable impacts to these areas during land disturbing activities need to be addressed in detail on the plan sheets and construction sequence.

Native Seed and Plant Selection for Stabilization of Wetlands, Riparian Areas, and Floodplains

Upon the completion of the land disturbing activity, vegetative cover must be established on all areas not stabilized by other means. If work in these areas stops for more than 15 working days, temporary vegetative cover and/or matting must be applied to all disturbed areas. The goal is to protect these areas from erosion and to prevent sedimentation of adjacent streams, wetlands, lakes, and other water bodies.

Planning considerations for wetlands, riparian areas and floodplains will require additional research, detail and specifications. Native grasses are usually required as a condition of a 401 Water Quality Certification or a trout buffer variance.

Native cool season species are plant species that naturally occur in the region in which they evolved. These plants are adapted to local soil types and climatic variations. Because most native species do not germinate and establish as readily as some introduced species, it is necessary to provide a non-native nurse crop or matting to stabilize the soil until the native crop can become established as the dominant cover. Once established, the native plants will produce an extensive root structure that, if properly maintained, will stabilize soils and reduce erosive forces of rainfall and overland stormwater flow. Many of these plants also possess characteristics that, when established, allow them not only to survive, but also to thrive under local conditions.

Seeding a mixture of perennial native grasses, rushes, and sedges is a way to establish permanent ground cover within wetlands, riparian areas and floodplains. The use of propagated plants is another method of reestablishing natives in these environments. Selecting a seed mixture and/or propagated plants of different species with complimentary characteristics will provide vegetation to fill select niches on sites with varying physical conditions. The design professional should note that because most native species do not germinate and establish as readily as some introduced species, it is necessary to provide a non-native nurse crop or matting to stabilize the soil until the native crop can become established as the dominant cover. For additional information about acceptable nurse crop varieties, consult the planting list in Appendix 8.02, local seed and plant suppliers, the North Carolina Cooperative Extension Service or a qualified design professional to assure the proper selection and plant mix.

Permanent native seed species within the seed mixture should be selected based on natural occurrence of each species in the project site area. Climate, soils, topography, and aspect are major factors affecting the suitability of plants for a particular site and these factors vary widely across North Carolina, with the most significant contrasts occurring among the three major physiographic regions of the state —Mountains, Piedmont, and Coastal Plain. Sub-regions of the state should also be considered. For example, the Triassic Basin in the Piedmont region may have characteristics that call for special soil treatment, limited plant selection, and special maintenance. Even within the riparian area, there may be need for different species depending on site conditions (i.e., dry sandy alluvial floodplains with wet pockets). Therefore, thoughtful planning is required when selecting species for individual sites in order to maximize successful vegetation establishment.

Native seed and plant species are included on the plant list in Appendix 8.02 of this manual.

The design professional should note that regardless of the benefits and advantages of native seeds and plants, there are potential issues if proper planning, installation and maintenance do not occur. These may include:

- Potential for erosion or washout during the establishment stage;
- Seasonal limitation on suitable seeding dates and availability of seed and plants;
- Adaptability of species at specific sites;
- Availability of water and appropriate temperatures during germination and early growth; and
- Lack of maintenance to control invasive plants and undesirable competition.

PLANTING

- **Seed** – Prepare the seed bed as described above in soil preparation. Apply seed at rates specified on the plans, and/or as recommended in Tables 6.11a-c of this manual, with a cyclone seeder, prop type spreader, drill, or hydroseeder on and/or into the prepared bed. Incorporate the seed into the seed bed as specified. Provide finished grades as specified on the approved plan and carefully cultipack the seedbed as terrain allows. If terrain does not allow for the use of a cultipacker, the approved plans and construction sequence must provide an alternative method of lightly compacting the soil. Mulch immediately.
- **Sprigs and Sod** – Install onto the prepared seed bed per the most current guidance in Carolina Lawns, NCSU Extension Bulletin AG-69, or Practice 6.12 *Sodding*.

- **Woody plants (liners, container, B&B)** – These materials are typically used to complement an herbaceous protective cover. They eventually are major components of long-term, permanent stabilization and should be chosen and planned in conjunction with immediate and long-term maintenance. The plants should be selected and specified by the design professional for each individual project. See Practice 6.13 *Trees, Shrubs, Vines, and Ground Covers.*

MAINTENANCE

The absence of or an incomplete landscape management specification and/or complete maintenance schedule shall constitute grounds for disapproval of the plans. Proper maintenance is critical for the continued stabilization once vegetative cover is established. Although maintenance strategies for different sites may be similar, no two construction sites in North Carolina have been or will be able to be controlled or protected in identical ways. Variations in climate, topography, soils, available moisture, size and many other conditions will dictate the maintenance methodology to be used. A detailed schedule of maintenance will be required on the plans. This schedule will illustrate how the initial planting will be maintained to assure immediate, short term and permanent protection. The schedule will address topics such as appropriate irrigation of plants during the early establishment phase, drought conditions, excessive rainfall, mulch replacement, supplemental seeding, supplemental soils tests, application of nutrients and amendments, control of competitive and invasive species, disease and insect control, and corrective maintenance, measures to address failure of vegetation to become established. Contractual responsibility for maintenance after initial establishment of vegetative cover will be provided on the plans, in the construction sequence and on the bid list for the project. Maintenance bonds and/or warranty guarantee may be required of the responsible party, especially for areas in or adjacent to environmentally sensitive sites such as wetlands, riparian buffers, floodplains, and waters of the State. See Example 6.11a for a sample maintenance specification and a minimum maintenance check list that shall be provided on all plans.

RECOMMENDED BID LIST

(These items should be itemized on documents utilized to obtain pricing for planting pertaining to vegetative stabilization of land disturbing projects in North Carolina.)

- Soil test prior to grading (price per each test).
- Soil test during grading operations (price per each test).
- Soil test at completion of grading and/or prior to seeding, sprigging, sodding and application of fertilizer, lime, and other soil amendments (price per each test).
- Ripping/subsoiling to a depth of six (6) inches. (Provide an alternate for ripping to a depth greater than six (6) inches.) (price per acre)
- Tilling/discing ripped area to a depth of four (4) inches and re-compacting with a cultipacker roller (include in seeding price).

- Seeding (price per square foot).
- Mulching (price per square foot).
- Repair seeding (price per square foot).
- Repair mulching (price per square foot).
- Matting (price per square yard).
- Watering (price per thousand gallons).
- Mowing (price per square foot).

SEEDING RECOMMENDATIONS

The following tables list herbaceous plants recommended for use as nurse crops for immediate stabilization and primary crops for initial and long-term stabilization. Nurse crops are expected to develop in two to five weeks and, with adequate maintenance, be an effective method of soil stabilization for a period of six months to one year. Nurse crops are not effective as primary long-term cover, however if properly maintained they can be an adequate cover and protection for the development of primary crops.

The goal for a primary crop is for it to develop over a three-week to one-year period and be effective up to three years with a well-defined maintenance program. The long-term goal for a primary crop is the initial step toward a sustainable protective cover without the need of maintenance. Where the primary crop is intended for a managed lawn and landscape aesthetics, the effective period can be extended by a more intense maintenance program. Where native species are utilized and become established during the planned maintenance program, a permanent cover that will support future succession species should exist and require little or no additional maintenance or management.

In uses of both nurse and primary crops, the development periods listed on the tables are optimal based on normal climatic conditions for the planting dates listed. The sediment and erosion control maintenance program must recognize that optimum temperatures and rainfall are the exception rather than the rule. The design professional needs to provide flexibility in the stabilization plan to address the potential ranges of temperature and moisture conditions we experience in North Carolina.

Information is provided for seeding rates, optimum planting dates in the state's three regions, sun and shade tolerance, invasive characteristics, compatibility in wetlands and riparian buffers, and installation maintenance considerations. By going through the lists the design professional can select the nurse and primary seed varieties and maintenance characteristics they feel are best suited for their site conditions, vegetation management expertise and maintenance capabilities.

To use the information in the seeding charts the plan preparer must:

- Determine what nurse crop best fits their site, soil conditions, and permanent seed mix.
- Obtain soil tests for all areas to be seeded.
- Know the site's region: mountains, piedmont, or coastal plain.
- Know if the areas to be seeded are sunny, part shade, or full shade.
- Know if the areas are well or poorly drained.
- Know if wetlands or riparian buffers are included in the areas to be seeded.
- Know if a chosen crop is invasive and if so, what potential impacts it will have on the site and adjacent properties.

With this knowledge the plan preparation may proceed utilizing the charts provided to provide the several seed mixes that will be applicable to the different areas requiring stabilization.

Table 6.11.a

HERBACEOUS PLANTS-Seeding recommendations for immediate stabilization/nurse crops (6 months to 1 year stabilization)
(Note: Temporary, effectiveness goal: 6 months to 1 year stabilization)

Common Name	Botanical Name	Seed Broadcast	Seed Drill	Seed Hydro-Seeder	Planting Season Mountains	Planting Season Piedmont	Planting Season Coastal Plain	Seed Depth	Seed Rate Mountains	Seed Rate Piedmont	Seed Rate Coastal Plain	Tolerance Shade	Tolerance Wet	Tolerance Wetlands & Riparian Buffers	Tolerance Salt	Tolerance Low Fertility	Tolerance Drought	Invasive Potential	Other Information - Comments
Grasses																			
Millet	Pennisetum glaucum	○ No	○ No	○ No	○ No seed	○ No seed	○ No seed	○ No	○ No	○ No	○ No	○ No	○ No	○ No	○ No	○ No	○ No	○ No	Not native, Annual, May be used in Coastal Plain
Oats	Avena sativa	○ No	○ No	○ No	○ No seed	○ No seed	○ No seed	○ No	○ No	○ No	○ No	○ No	○ No	○ No	○ No	○ No	○ No	○ No	Not native, Annual, May be used in Coastal Plain
Cereal rye	Secale cereale	○ No	○ No	○ No	○ No seed	○ No seed	○ No seed	○ 1 in	○ 100	○ 100	○ 100	○ No	○ No	○ No	○ No	○ No	○ No	○ No	Not native, Annual, May be used in Coastal Plain
Annual ryegrass	Lolium multiflorum	○ No	○ No	○ No	○ No seed	○ No seed	○ No seed	○ 1/4 in	○ 25	○ 25	○ 25	○ No	○ No	○ No	○ No	○ No	○ No	○ No	Not native, Annual, May be used in Coastal Plain
Sorghum-Sudan	Sorghum sudanense	○ No	○ No	○ No	○ No seed	○ No seed	○ No seed	○ 1 in	○ 50	○ 50	○ 50	○ No	○ No	○ No	○ No	○ No	○ No	○ No	Not native, Annual, May be used in Coastal Plain
Wheat	Triticum aestivum	○ No	○ No	○ No	○ No seed	○ No seed	○ No seed	○ 1 in	○ 100	○ 100	○ 100	○ No	○ No	○ No	○ No	○ No	○ No	○ No	Not native, Annual, May be used in Coastal Plain
Wildflowers	Various	○ No	○ No	○ No	○ No seed	○ No seed	○ No seed	○ 1/4 in	○ 25	○ 25	○ 25	○ No	○ No	○ No	○ No	○ No	○ No	○ No	Not native, Annual, May be used in Coastal Plain
Millet	Pennisetum glaucum	○ No	○ No	○ No	○ No seed	○ No seed	○ No seed	○ 1 in	○ 50	○ 50	○ 50	○ No	○ No	○ No	○ No	○ No	○ No	○ No	Not native, Annual, May be used in Coastal Plain
Sudan	Sorghum sudanense	○ No	○ No	○ No	○ No seed	○ No seed	○ No seed	○ 1 in	○ 50	○ 50	○ 50	○ No	○ No	○ No	○ No	○ No	○ No	○ No	Not native, Annual, May be used in Coastal Plain
Sweet Lupine	Lupinus angustifolius	○	○	○ No	○ No seed	○ No seed	○ No seed	○ 1 in	○ 50	○ 50	○ 50	○ No	○ No	○ No	○ No	○ No	○ No	○ No	Not native, Annual, May be used in Coastal Plain

NOTES:
1. Seed rates are for bulk seed unless otherwise noted.
2. Seed rates in pounds per acre. Seeding rates may need to be increased if seeded alone with nurse crop for significantly shorter dates and/or little or no residual stem.
3. All seed is presumed to be inoculated for the appropriate legume.
4. Mixtures of grasses and legumes are recommended for most applications. Recommendations for seed mixtures are found in the text.
5. Sprigging is not recommended for immediate stabilization unless nurse is Net Yarrow. Yarrow is applied per sq.yd or square meter. Immediate stabilization method is practice

REVISIONS	BY

FREELAND and KAUFFMAN, INC.
Engineers * Landscape Architects
209 West Stone Avenue
Greenville, South Carolina 29609
864-233-5497

PRELIMINARY NOT FOR CONSTRUCTION

AAA CAR WASH
WILMINGTON, NC
MPV PROPERTIES
2400 SOUTH BOULEVARD #300
CHARLOTTE, NC 28203
(704)-248-2100

Approved Construction Plan

	Name	Date
Planning		
Traffic		
Fire		

SWPPP DETAILS
2 OF 5

DRAWN	AJW
CHECKED	BTS
DATE	6/17/2019
SCALE	AS NOTED
DRAWING	15

PERMANENT SEEDING CONT.

Table 6.11.b

HERBACEOUS PLANTS-Seeding recommendations for primary stabilization
NON-NATIVE SPECIES
Successful development depends on planting date (effectiveness goal: 6 mo. - 3 yrs. without an ongoing maintenance program)

Common Name (Botanical Name)	Seeds/ Pound (approx.)	Seeds/ Acre (thousands)	Seeding Depth (inches)	Hardiness Zone	Seed Source	Seed Cost	Seeds/ Linear Foot	Seed Cost/ Linear Foot	Germination Enhancement	Establishment Period	Growth Habit	Tolerance: Drought	Tolerance: Shade	Tolerance: Fire	Tolerance: Wet Soil	Tolerance: Cold	Tolerance: Heat	Mowing Frequency	Other Information, Cultivars, Recommendations
Grass Family (Poaceae)																			
Common bermudagrass (*Cynodon dactylon*)	2,000 - 2,200 lbs. "Seed"	25 lbs.	¼ - ½	6b - 10	Hulled or Scarified	$2 - $3/lb.	10 - 12	$0.01 - $0.02	Scar	Slow	Stolons, Rhizomes	Excellent	Poor	Tolerant	Poor	Poor	Tolerant	Frequent	Hybrids available
Crown Vetch (*Coronilla varia*)	4	10 lbs.	¼ - ½	5b - 9	Scarified or Unscarified "Seed"	$10 - $15/lb.	2 - 3	$0.20 - $0.30	Scar	Slow	Stolons, Rhizomes	Excellent	Tolerant	Tolerant	Poor	Tolerant	Tolerant	Infrequent	Seed production difficult
Crabgrass (*Digitaria sanguinalis*)	1	1 lbs. (1 lb. for hand shoulder)	¼	5b - 10	Scarified or Unscarified "Seed"	$10 - $15/lb.	20 - 25	$0.20 - $0.25	Scar	Slow	Stolons, Rhizomes	Excellent	Poor	Tolerant	Poor	Poor	Tolerant	Frequent	Seed production difficult
Kentucky bluegrass (*Poa pratensis*)	2,200 - 2,500	100 - 125	¼ - ½	2 - 6	Scarified or Unscarified "Seed"	$10 - $15/lb.	45 - 55	$0.20 - $0.25	Scar	Slow	Rhizomes	Poor	Tolerant	Tolerant	Poor	Tolerant	Tolerant	Frequent	Hybrids available
Perennial ryegrass (*Lolium perenne*)	2,000 - 2,500	100 - 125	¼ - ½	5b - 10	Scarified or Unscarified "Seed"	$10 - $15/lb.	45 - 55	$0.20 - $0.25	Scar	Slow	Bunch	Poor	Poor	Tolerant	Poor	Poor	Tolerant	Frequent	Hybrids available
Tall Fescue (*Festuca arundinacea*)	227,000 - 250,000	10 - 12	¼ - ½	5b - 10	Scarified or Unscarified "Seed"	$10 - $15/lb.	2 - 3	$0.20 - $0.30	Scar	Slow	Bunch	Tolerant	Tolerant	Tolerant	Tolerant	Tolerant	Tolerant	Infrequent	Hybrids available
Wheat (*Triticum aestivum*)	15,000 - 18,000	1 - 2	½ - 1	5b - 10	Scarified or Unscarified "Seed"	$5 - $10/lb.	0.3 - 0.5	$0.15 - $0.25	Scar	Slow	Bunch	Poor	Poor	Tolerant	Poor	Poor	Tolerant	Frequent	Hybrids available
Barley (*Hordeum vulgare*)	12,000 - 14,000	1 - 2	½ - 1	5b - 10	Scarified or Unscarified "Seed"	$5 - $10/lb.	0.3 - 0.5	$0.15 - $0.25	Scar	Slow	Bunch	Poor	Poor	Tolerant	Poor	Poor	Tolerant	Frequent	Hybrids available
Oats (*Avena sativa*)	14,000 - 16,000	2 - 3	½ - 1	5b - 10	Scarified or Unscarified "Seed"	$5 - $10/lb.	0.4 - 0.6	$0.15 - $0.25	Scar	Slow	Bunch	Poor	Poor	Tolerant	Poor	Poor	Tolerant	Frequent	Hybrids available
Rye (*Secale cereale*)	18,000 - 20,000	2 - 3	½ - 1	2 - 10	Scarified or Unscarified "Seed"	$5 - $10/lb.	0.4 - 0.6	$0.15 - $0.25	Scar	Slow	Bunch	Poor	Poor	Tolerant	Poor	Poor	Tolerant	Frequent	Hybrids available
Sudangrass (*Sorghum bicolor*)	18,000 - 20,000	2 - 3	½ - 1	5b - 10	Scarified or Unscarified "Seed"	$5 - $10/lb.	0.4 - 0.6	$0.15 - $0.25	Scar	Slow	Bunch	Tolerant	Poor	Tolerant	Poor	Poor	Tolerant	Infrequent	Hybrids available
Foxtail millet (*Setaria italica*)	4,000 - 5,000	30 - 35	½ - 1	5b - 10	Scarified or Unscarified "Seed"	$5 - $10/lb.	0.1 - 0.2	$0.15 - $0.25	Scar	Slow	Bunch	Tolerant	Poor	Tolerant	Poor	Poor	Tolerant	Infrequent	Hybrids available
Pearlmillet (*Pennisetum glaucum*)	2,000 - 2,500	15 - 20	½ - 1	5b - 10	Scarified or Unscarified "Seed"	$5 - $10/lb.	0.1 - 0.2	$0.15 - $0.25	Scar	Slow	Bunch	Tolerant	Poor	Tolerant	Poor	Poor	Tolerant	Infrequent	Hybrids available
Other Grasses																			
Orchardgrass (*Dactylis glomerata*)	2,000 - 2,500	100 - 125	¼ - ½	4 - 10	Scarified or Unscarified "Seed"	$10 - $15/lb.	45 - 55	$0.20 - $0.25	Scar	Slow	Bunch	Poor	Tolerant	Tolerant	Poor	Tolerant	Tolerant	Frequent	Seed production difficult
Tall oatgrass (*Arrhenatherum elatius*)	140,000 - 150,000	7 - 8	¼ - ½	4 - 10	Scarified or Unscarified "Seed"	$10 - $15/lb.	3 - 4	$0.20 - $0.25	Scar	Slow	Bunch	Poor	Tolerant	Tolerant	Poor	Tolerant	Tolerant	Frequent	Seed production difficult
Legumes (Fabaceae)																			
Alfalfa (*Medicago sativa*)	220,000 - 250,000	10 - 12	¼ - ½	3 - 10	Scarified or Unscarified "Seed"	$10 - $15/lb.	5 - 6	$0.20 - $0.25	Scar	Slow	Taproot	Poor	Poor	Tolerant	Poor	Poor	Tolerant	Frequent	Hybrids available
Alsike clover (*Trifolium hybridum*)	700,000 - 750,000	2 - 3	¼ - ½	3 - 10	Scarified or Unscarified "Seed"	$10 - $15/lb.	15 - 20	$0.20 - $0.25	Scar	Slow	Taproot	Poor	Tolerant	Tolerant	Poor	Tolerant	Tolerant	Frequent	Hybrids available
Crimson clover (*Trifolium incarnatum*)	140,000 - 150,000	7 - 8	¼ - ½	6 - 10	Scarified or Unscarified "Seed"	$10 - $15/lb.	3 - 4	$0.20 - $0.25	Scar	Slow	Taproot	Poor	Poor	Tolerant	Poor	Poor	Tolerant	Frequent	Hybrids available
Red clover (*Trifolium pratense*)	270,000 - 300,000	9 - 10	¼ - ½	3 - 10	Scarified or Unscarified "Seed"	$10 - $15/lb.	6 - 7	$0.20 - $0.25	Scar	Slow	Taproot	Poor	Tolerant	Tolerant	Poor	Tolerant	Tolerant	Frequent	Hybrids available
White clover (*Trifolium repens*)	700,000 - 750,000	2 - 3	¼ - ½	3 - 10	Scarified or Unscarified "Seed"	$10 - $15/lb.	15 - 20	$0.20 - $0.25	Scar	Slow	Stolons	Poor	Tolerant	Tolerant	Poor	Tolerant	Tolerant	Frequent	Hybrids available
Hairy vetch (*Vicia villosa*)	20,000 - 22,000	40 - 45	¼ - ½	5b - 10	Scarified or Unscarified "Seed"	$10 - $15/lb.	0.5 - 0.6	$0.20 - $0.25	Scar	Slow	Vine	Poor	Poor	Tolerant	Poor	Poor	Tolerant	Infrequent	Seed production difficult
Sericea lespedeza (*Lespedeza cuneata*)	300,000 - 350,000	2 - 3	¼ - ½	5b - 10	Scarified or Unscarified "Seed"	$10 - $15/lb.	7 - 8	$0.20 - $0.25	Scar	Slow	Taproot	Poor	Tolerant	Tolerant	Poor	Tolerant	Tolerant	Infrequent	Seed production difficult
Hairy Indigo (*Lespedeza hirta*)	150,000 - 160,000	3 - 4	¼ - ½	5b - 10	Scarified or Unscarified "Seed"	$10 - $15/lb.	3 - 4	$0.20 - $0.25	Scar	Slow	Taproot	Poor	Tolerant	Tolerant	Poor	Tolerant	Tolerant	Infrequent	Seed production difficult
Korean lespedeza (*Lespedeza stipulacea*)	200,000 - 250,000	2 - 3	¼ - ½	5b - 10	Scarified or Unscarified "Seed"	$10 - $15/lb.	5 - 6	$0.20 - $0.25	Scar	Slow	Taproot	Poor	Tolerant	Tolerant	Poor	Tolerant	Tolerant	Infrequent	Seed production difficult
Lespedeza (*Lespedeza thunbergii*)	150,000 - 160,000	3 - 4	¼ - ½	5b - 10	Scarified or Unscarified "Seed"	$10 - $15/lb.	3 - 4	$0.20 - $0.25	Scar	Slow	Taproot	Poor	Tolerant	Tolerant	Poor	Tolerant	Tolerant	Infrequent	Seed production difficult
Lespedeza (*Lespedeza virginica*)	150,000 - 160,000	3 - 4	¼ - ½	5b - 10	Scarified or Unscarified "Seed"	$10 - $15/lb.	3 - 4	$0.20 - $0.25	Scar	Slow	Taproot	Poor	Tolerant	Tolerant	Poor	Tolerant	Tolerant	Infrequent	Seed production difficult
Lupine (*Lupinus perennis*)	20,000 - 25,000	40 - 50	¼ - ½	3 - 10	Scarified or Unscarified "Seed"	$10 - $15/lb.	0.5 - 0.6	$0.20 - $0.25	Scar	Slow	Taproot	Poor	Poor	Tolerant	Poor	Poor	Tolerant	Infrequent	Seed production difficult
Partridge pea (*Chamaecrista fasciculata*)	50,000 - 55,000	20 - 25	¼ - ½	5b - 10	Scarified or Unscarified "Seed"	$10 - $15/lb.	1 - 2	$0.20 - $0.25	Scar	Slow	Taproot	Poor	Tolerant	Tolerant	Poor	Tolerant	Tolerant	Infrequent	Seed production difficult
Sericea lespedeza (*Lespedeza cuneata*)	300,000 - 350,000	2 - 3	¼ - ½	5b - 10	Scarified or Unscarified "Seed"	$10 - $15/lb.	7 - 8

6.17 RECP

ROLLED EROSION CONTROL PRODUCTS

Definition Rolled erosion control products are manufactured or fabricated into rolls designed to reduce soil erosion and assist in the growth, establishment and protection of vegetation. Examples of RECP's are blankets, nets, and matting.

Purpose Erosion control mats and blankets are intended to protect soil and hold seed and mulch in place on slopes and in channels so that vegetation can become well established. Turf reinforcement mats can be used to permanently reinforce grass in drainage ways during high flows. Nets are made of high tensile material woven into an open net which overlays mulch materials. Blankets are made of interlocking fibers, typically held together by a biodegradable or photodegradable netting (for example, excelsior or straw blankets). They generally have lower tensile strength than nets, but cover the ground more completely. Coir (coconut fiber) fabric comes as both nets and blankets.

Conditions Where Practice Applies Rolled Erosion Control Products (RECP's) should be used to aid permanent vegetated stabilization of slopes 2:1 or greater and with more than 10 feet of vertical relief. RECP's should also be used when mulch cannot be adequately tacked and where immediate ground cover is required to prevent erosion damage.

RECP's should be used to aid in permanent stabilization of vegetated channels when runoff velocity will exceed 2 ft/sec on bare earth during the 2-year rainfall event that produces peak runoff. The product selected must have a permissible shear stress that exceeds the shear stress of the design runoff event.

Planning Considerations

- Good ground contact is critical to the effectiveness of these products. If good ground contact is not achieved, runoff can concentrate under the product, resulting in significant erosion.
- Nets must be used in conjunction with mulch. Excelsior, woven straw blankets and coir (coconut fiber) blankets may be installed without mulch. There are many other types of erosion control nets and blankets on the market that may be appropriate in certain circumstances. In general, most nets (e.g. jute matting) require mulch in order to prevent erosion because they have a fairly open structure. Blankets typically do not require mulch because they usually provide complete protection of the surface.
- Most netting used with blankets is photodegradable, meaning they break down under sunlight (not UV stabilized). However, this process can take months or years even under bright sun. Once vegetation is established, sunlight does not reach the mesh. It is not uncommon to find non-degraded netting still in place several years after the installation. This can be a problem if maintenance requires the use of mowers or ditch cleaning equipment. In addition, birds and small animals can become trapped in the netting.

Design Criteria

- Biodegradable blankets are available for use in sensitive areas. These organic blankets are usually held together with a fiber mesh and stitching which may last up to a year.

The following discussion and examples of design are adapted from *"Green Engineering, Design Principles and Applications Using Rolled Erosion Control Products"* by C. Joel Sprague.

Slope Protection: **Reducing raindrop and overland flow erosion.** The Revised Universal Soil Loss Equation (RUSLE), as shown below, is commonly used to estimate erosion due to rainfall and sheet runoff.

$$A = R \cdot K \cdot LS \cdot C \cdot P$$

where:

A = soil loss in tons/acre/year
R = rain factor
K = soil erodibility
LS = topographic factor
C = cover factor
P = practice factor

The United States Department of Agriculture's handbook, "Predicting Soil Erosion by Water: A Guide to Conservation Planning with the Revised Universal Soil Loss Equation (RUSLE), 1997," provides agriculture-oriented values for all of these variables. Yet, when the equation is used to estimate construction-related erosion, the following unofficial C- and P-factors developed specifically for these applications should be used.

The C-Factor—C-factors are equal to the reduction in soil loss when using a specific erosion control system when compared to the comparable bare soil (control) condition. The designer will require C-factors representing various conditions from unvegetated to fully vegetated, including vegetation, which has been mulched or, alternatively, protected by an RECP, in order to determine an appropriate factor to be used to represent the design condition. (See Table 6.17a for a range of C-factors.)

Table 6.17a C-Factor for Various Slope Treatments

Treatment	Dry Mulch Rate		C-Factor for Growing Period*			
	kg/m²	Slope %	<6 Weeks	1.5-6 Months	6-12 Months	Annualized**
No mulching or seeding	—	all	1.00	1.00	1.00	1.00
Seeded grass	none	all	0.70	0.10	0.05	0.15
	0.22	<10	0.20	0.07	0.03	0.07
	0.34	<10	0.12	0.05	0.02	0.05
	0.45	<10	0.06	0.05	0.02	0.04
	0.45	11 - 15	0.07	0.05	0.02	0.04
	0.45	16 - 20	0.11	0.05	0.02	0.04
	0.45	21 - 25	0.14	0.05	0.02	0.05
	0.45	26 - 33	0.17	0.05	0.02	0.05
	0.45	34 - 50	0.20	0.05	0.02	0.05
Second-year grass	—	all	0.01	0.01	0.01	0.01
Organic and Synthetic Blankets	—	all	0.07	0.01	0.005	0.02
Composite Mats	—	all	0.07	0.01	0.005	0.02
Synthetic Mats	—	all	0.14	0.02	0.005	0.03
Fully Vegetated Mats	—	all	0.005	0.005	0.005	0.005

* Approximate time periods for humid climates: Conversion: kg/m² x 4.45 = tons/acre.
** Annualized C-Factor = (<6 weeks value x 6/52) + (1.5-6 months value x 20/52) + (6-12 months value x 26/52).

Table 6.17b Permissible Shear Stress, τ_p, of Various RECP's

Category	Product Type	Max. Permissible Shear Stress (lb/ft²)	Slopes* Up To
Degradable RECP's (Unvegetated)	Nets and Mulch	0.1 - 0.2	20:1
	Coir Mesh	0.4 - 3.0	3:1
	Blanket - Single Net	1.55 - 2.0	2:1
	Blanket - Double Net	1.65 - 3.0	1:1
Nondegradable RECP's	Unvegetated TRM**	2 - 4	1:1
	Partially Vegetated TRM	4 - 6	>1:1
	Fully Vegetated	5 - 10	>1:1

* Steeper slope limits may apply. For further information, contact the manufacturer.
** Turf Reinforcement Mat.

The P-Factor—when examining erosion by itself, is commonly taken as 1.0, since this assumes that no special "practices" (i.e. terracing, contouring, etc.) will be used. Yet, the use of silt fences or other storm water management/ sediment control practices may be integrated into the RUSLE using a P-factor that is less than 1.0, which reflects the effectiveness of the sediment control practice in removing sediment from runoff.

Sample Problem 6.17a A steep slope is to be protected from erosion using RECP. The 3H:1V slope is 100 feet long and comprised of silty loam. The RUSLE will be used to evaluate the effectiveness of RECP in limiting annual soil loss. Following are the inputs to the RUSLE equation from the U.S. Department of Agriculture:

R = 250
K = 0.33
LS = 6.2
P = 1.0 (assuming no sediment control)

From Table 6.17a:

$C_{unprotected}$ = 1.00
$C_{protected}$, year 1 = 0.03
$C_{protected}$, year 2+ = 0.005

$A_{unprotected}$ = 250 x 0.33 x 6.2 x 1.0 x 1.0 = 511 tons/acre/year
$A_{protected}$, year 1 = 250 x 0.33 x 6.2 x 0.03 x 1.0 = 15 tons/acre/year
$A_{protected}$, year 2+ = 250 x 0.33 x 6.2 x 0.005 x 1.0 = 3 tons/acre/year

This example shows that vegetation, protected by an RECP, is 97 percent effective in reducing erosion in the first year and 99.5 percent effective in the longer-term.

Table 6.17b aids in selecting an appropriate type of RECP for the project-specific slope.

Drainage Channels Concepts—Permissible shear design is commonly used to determine if a channel liner is stable. This method requires the input of an appropriate expected flow rate (discharge) as well as the determination of flow depth. A broader presentation of channel design is located in Appendix 8.05, *Design of Stable Channels and Diversions*.

The design flow rate will be based on local storm frequency design standards and flow depth is calculated - commonly using Manning's equation. With these inputs the designer can then perform a permissible shear design, which compares the permissible shear of the prospective liner materials to the expected flow-induced shear as calculated using the equation below.

$$\tau_d = \gamma D S$$

where:

γ = unit weight of water (62.4lb/ft³)
D = depth of flow (ft)
S = channel slope (ft/ft)

If the permissible shear stress, τ_p, is greater than the computed shear, τ_d, the lining is considered acceptable. Values for permissible shear stress, τ_p, for linings are based on research conducted at laboratory facilities and in the field. Typical values are given in Table 6.17b. The permissible shear stress, τ_p, indicates the force per unit area resulting from flowing water required to create instability of the lining material and/or adjacent soil.

Manning's Equation and Roughness Coefficient, n—The condition of uniform, steady flow in a channel at a known discharge is computed using the Manning's Equation below. Numerous computer programs are available to facilitate the use of this equation since a trial-and-error solution relating channel width, B, and depth, D, is required.

$$Q = (1.49/n)\ (A)\ (R)^{2/3}\ (S)^{1/2}$$

Manning's equation for determining velocity:

$$V = (1.49/n)\ (R)^{2/3}\ (S)^{1/2}$$

where:

Q = discharge (cfs)
V = average velocity in cross section (ft/s)
n = Manning's roughness coefficient
A = cross-sectional area (ft²)
R = hydraulic radius = A/P (ft)
P = wetted perimeter (ft)
S = energy gradient (commonly taken as equivalent to the channel bed slope, ft/ft)

The appropriate Manning's "n" to use when designing with RECP's depends on whether one is designing for bare soil retention and vegetation establishment (short-term) or for fully grassed conditions (long term), or both. The "n" values for RECP's can vary significantly with material type and flow depth, but they typically range from 0.02 to 0.04 and are usually provided by the manufacturer.

In lieu of product-specific information, the following values can be used as approximations.

$n_{unvegetated}$ = 0.02
$n_{vegetated}$ = refer to Table 6.17c and Figure 6.17a
n_{TRM} = refer to Table 8.05e

Table 6.17c Grass Retardance Categories

Average Grass Length	Retardance
>24 in.	A
10 in. to 24 in.	B
6 in. to 10 in.	C
2 in. to 6 in.	D
Less than 2 in.	E

Figure 6.17a Hydraulic roughness of grass

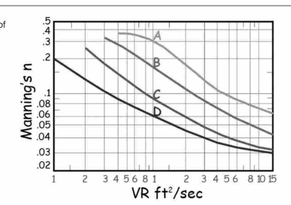

Figure 6.17b Limiting values for bare and TRM protected soils

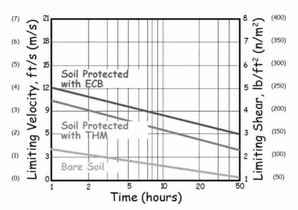

Figure 6.17c Limiting values for plain and TRM reinforced grass

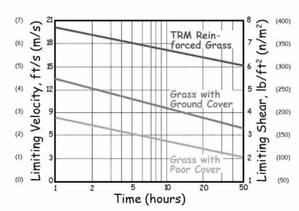

Sample Problem 6.17b Determine if an RECP-lined drainage channel will be stable for a long-term peak flow (10-year design storm) of 70 cfs down a 20:1 slope (S=0.05) with a 4 foot bottom width and 1:1 side slopes. The duration of flow is 50 hours for long-term and one hour for short-term design. The grass cover is expected to be in retardance group D. Short-term stability can be checked using the two-year design storm, which produces a short-term peak flow of 45 cfs.

Long-term design = vegetated channel stability

- Use $Q_{peak} = Q_{10\text{-}year}$ = 70 cfs
- From Figure 6.17c: Limiting shear = 6 lb/ft²
- Assume $n_{vegetated}$ = 0.05

Solve for the depth of flow using iterations of Manning's equation. An Excel spreadsheet located on the internet at http://www.dlr.enr.state.nc.us/pages/sedimenttecassist.html or commercially available channel software is recommended.

For trapezoidal channels:

$$(bd + zd^2)\left[\frac{(bd + zd^2)}{b + 2d\,(z^2 + 1)^{1/2}}\right]^{2/3} = \frac{Qn}{1.49S^{1/2}}$$

From trial-and-error, d = 1.7ft

Determine area of flow A, from A = (bd + zd²)
= 9.8ft²

Since slope < 1:10, calculate VR using:
$\sqrt{VR}$= (7.1ft/s) (1.11) = 7.88ft/s
From Figure 6.17a: Use n = 0.032. Recalculate d = 1.34ft
A = 7.14ft²

Check shear stress τ_d = γDS
= (62.4) (1.34) (0.05)
= 4.18 lb/ft²
4.18 < 6 lb/ft², therefore acceptable

Sample Problem 6.17b con't. **Short-term design** = bare soil channel stability

- Use $Q_{peak} = Q_{2\text{-}year}$ = 45 cfs
- From Figure 6.17b: Limiting shear = 4.5 lb/ft²
- For mat on bare soil, n = 0.03

Determine depth of flow via trail-and-error using Manning's Equation:

For trapezoidal channels: (bd + zd²)

$$(bd + zd^2)\left[\frac{(bd + zd^2)}{b + 2d\,(z^2 + 1)^{1/2}}\right]^{2/3} = \frac{Qn}{1.49S^{1/2}}$$

From trial-and-error, d = 1.0ft

Check shear stress τ_d = γDS
= (62.4) (1.0) (0.05)
= 3.12 lb/ft²
3.12 < 4.5 lb/ft², therefore acceptable

Construction Specifications

Construction

Even if properly designed, if not properly installed, RECP's will probably not function as desired. Proper installation is imperative. Even if properly installed, if not properly timed and nourished, vegetation will probably not grow as desired. Proper seed/vegetation selection is also imperative.

Grade the surface of installation areas so that the ground is smooth and loose. When seeding prior to installation, follow the steps for seed bed preparation, soil amendments, and seeding in *Surface Stabilization*, 6.1. All gullies, rills, and any other disturbed areas must be fine graded prior to installation. Spread seed before RECP installation. (**Important**: Remove all large rocks, dirt clods, stumps, roots, grass clumps, trash, and other obstructions from the soil surface to allow for direct contact between the soil surface and the RECP.)

Terminal anchor trenches are required at RECP ends and intermittent trenches must be constructed across channels at 25-foot intervals. Terminal anchor trenches should be a minimum of 12 inches in depth and 6 inches in width, while intermittent trenches need be only 6 inches deep and 6 inches wide.

Installation for Slopes— Place the RECP 2-3 feet over the top of the slope and into an excavated end trench measuring approximately 12 inches deep by 6 inches wide. Pin the RECP at 1 foot intervals along the bottom of the trench, backfill, and compact. Unroll the RECP down (or along) the slope maintaining direct contact between the soil and the RECP. Overlap adjacent rolls a minimum of 3 inches. Pin the RECP to the ground using staples or pins in a 3 foot center-to-center pattern. Less frequent stapling/pinning is acceptable on moderate slopes.

Installation in Channels— Excavate terminal trenches (12 inches deep and 6 inches wide) across the channel at the upper and lower end of the lined channel sections. At 25-foot intervals along the channel, anchor the RECP across the channel either in 6 inch by 6 inch trenches or by installing two closely spaced rows of anchors. Excavate longitudinal trenches 6 inches deep and wide along channel edges (above water line) in which to bury the outside RECP edges. Place the first RECP at the downstream end of the channel. Place the end of the first RECP in the terminal trench and pin it at 1 foot intervals along the bottom of the trench.

Note: The RECP should be placed upside down in the trench with the roll on the downstream side of the bench.

Once pinned and backfilled, the RECP is deployed by wrapping over the top of the trench and unrolling upstream. If the channel is wider than the provided rolls, place ends of adjacent rolls in the terminal trench, overlapping the adjacent rolls a minimum of 3 inches. Pin at 1 foot intervals, backfill, and compact. Unroll the RECP in the upstream direction until reaching the first intermittent trench. Fold the RECP back over itself, positioning the roll on the downstream side of the trench, and allowing the mat to conform to the trench.

Then pin the RECP (two layers) to the bottom of the trench, backfill, and compact. Continue up the channel (wrapping over the top of the intermittent trench) repeating this step at other intermittent trenches, until reaching the upper terminal trench.

At the upper terminal trench, allow the RECP to conform to the trench, secure with pins or staples, backfill, compact and then bring the mat back over the top of the trench and onto the existing mat (2 to 3 feet overlap in the downstream direction), and pin at 1 foot intervals across the RECP. When starting installation of a new roll, begin in a trench or shingle-lap ends of rolls a minimum of 1 foot with upstream RECP on top to prevent uplifting. Place the outside edges of the RECP(s) in longitudinal trenches, pin, backfill, and compact.

Anchoring Devices—11 gauge, at least 6 inches length by 1 inch width staples or 12 inch minimum length wooden stakes are recommended for anchoring the RECP to the ground.

Drive staples or pins so that the top of the staple or pin is flush with the ground surface. Anchor each RECP every 3 feet along its center. Longitudinal overlaps must be sufficient to accommodate a row of anchors and uniform along the entire length of overlap and anchored every 3 feet along the overlap length. Roll ends may be spliced by overlapping 1 foot (in the direction of water flow), with the upstream/upslope mat placed on top of the downstream/ downslope RECP. This overlap should be anchored at 1 foot spacing across the RECP. When installing multiple width mats heat seamed in the factory, all factory seams and field overlaps should be similarly anchored.

Figure 6.17d Temporary Channel Liners; Washington State Department of Ecology

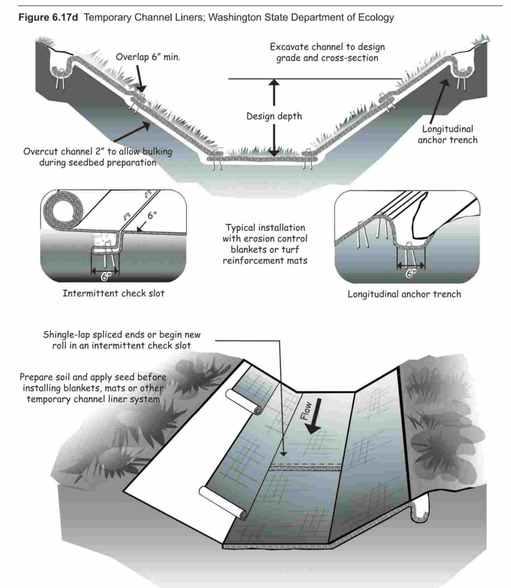

Figure 6.17e Channel Installation and Slope Installation; Washington State Ecology Department

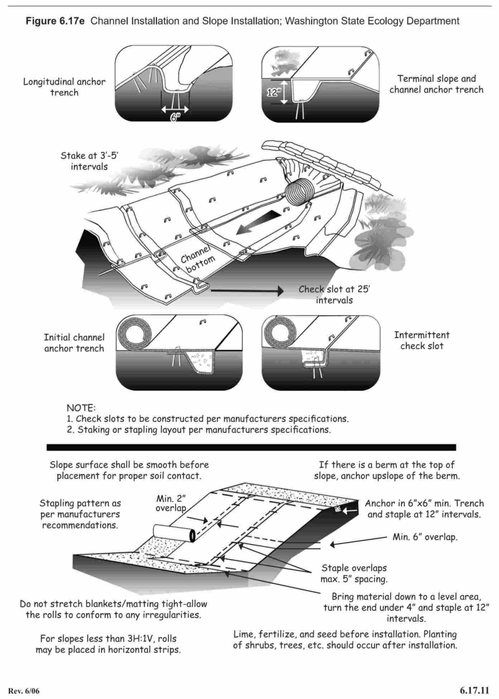

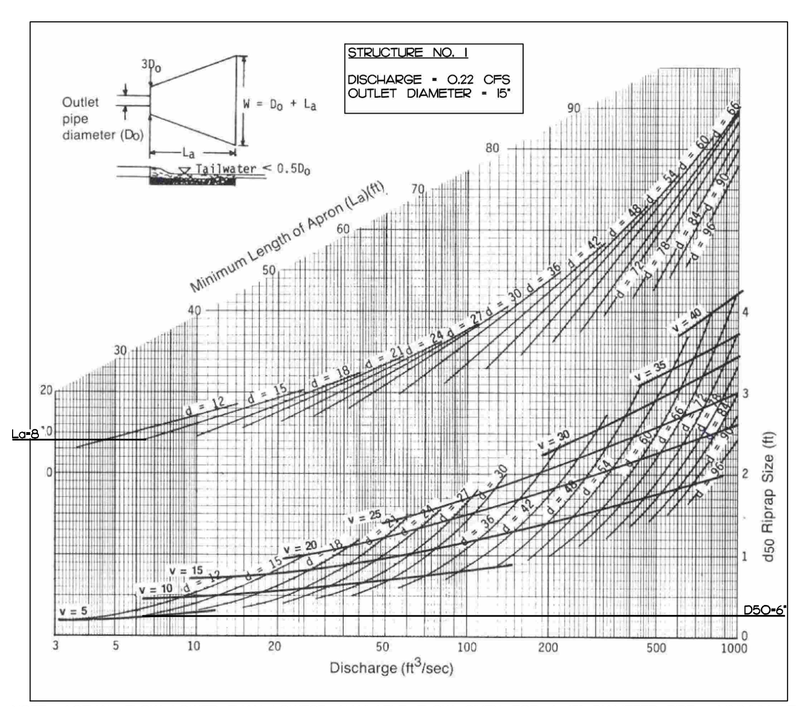

NOTE: ACTUAL FLOW LOWER THAN LOWEST AVAILABLE FLOW GIVEN FOR A 15" DIAMETER PIPE. MINIMUM LENGTH (La) AND D50 USED. 6" WAS USED AS A MINIMUM FOR D50 IF CALCULATED VALUE WAS LOWER.

FK DETAIL

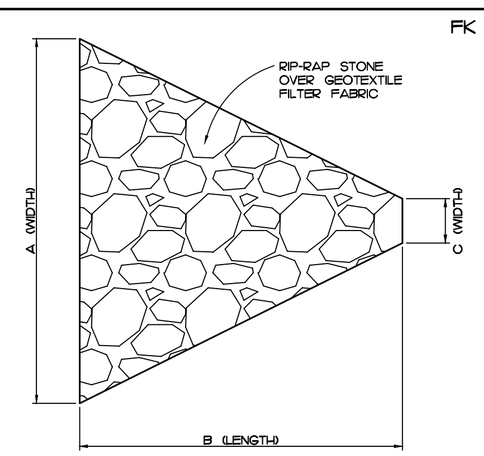

RIP-RAP APRONS

MINIMUM DIMENSIONS

STRUCTURE NO.	A (WIDTH)	B (LENGTH)	C (WIDTH)	D_{50} SIZE	D_{100} SIZE	THICKNESS
1	9.25'	8'	3.75'	6"	9"	14"

NOTE: DIMENSIONS ABOVE ARE MINIMUM DIMENSIONS. APRONS SHOULD EXTEND TO BASE OF SLOPES IN CASES WHERE MINIMUM DIMENSIONS DO NOT REACH.

Approved Construction Plan
Name Date
Planning
Traffic
Fire

SWPPP DETAILS

4 OF 5

REVISIONS	BY

FREELAND and KAUFFMAN, INC.
Engineers * Landscape Architects
209 West Stone Avenue
Greenville, South Carolina 29609
864-233-5497

PRELIMINARY NOT FOR CONSTRUCTION

AAA CAR WASH
WILMINGTON, NC
MPV PROPERTIES
2400 SOUTH BOULEVARD #300
CHARLOTTE, NC 28203
(704)-248-2100

DRAWN AJW
CHECKED BTS
DATE 6/17/2019
SCALE AS NOTED
DRAWING 17

6.62 **SEDIMENT FENCE**

Definition A temporary sediment control measure consisting of fabric buried at the bottom, stretched, and supported by posts.

Purpose To retain sediment from small disturbed areas by reducing the velocity of sheet flows to allow sediment deposition.

Conditions Where Practice Applies Below small-disturbed areas that are less than ½ acre per 100 feet of fence.

Where runoff can be stored behind the sediment fence without damaging the fence or the submerged area behind the fence.

Do not install sediment fences across streams, ditches, or waterways, or other areas of concentrated flow.

Sediment fence should be placed along topographic elevation contours, where it can intercept stormwater runoff that is in dispersed sheet flow. Sediment fence should not be used alone below graded slopes greater than 10 feet in height.

Planning Considerations A sediment fence is a system to retain sediment on the construction site. The fence retains sediment primarily by retarding flow and promoting deposition. In operation, generally the fence becomes clogged with fine particles, which reduce the flow rate. This causes a pond to develop behind the fence. The designer should anticipate ponding and provide sufficient storage areas and overflow outlets to prevent flows from overtopping the fence. Since sediment fences are not designed to withstand high water levels, locate them so that only shallow pools can form. Tie the ends of a sediment fence into higher ground to prevent flow around the end of the fence before the pool reaches design level. Curling each end of the fence uphill in a "J" pattern may be appropriate to prevent end flow. Provide stabilized outlets to protect the fence system and release storm flows that exceed the design storm.

Deposition occurs as the storage pool forms behind the fence. The designer can direct flows to specified deposition areas through appropriate positioning of the fence or by providing an excavated area behind the fence. Plan deposition areas at accessible points to promote routine cleanout and maintenance. Show deposition areas in the erosion and sedimentation control plan. A sediment fence acts as a diversion if placed slightly off the contour. A maximum slope of 2 percent is recommended. This technique may be used to control shallow, uniform flows from small disturbed areas and to deliver sediment-laden water to deposition areas. The anchoring of the toe of the fence should be reinforced with 12 inches of NCDOT #5 or #57 washed stone when flow will run parallel to the toe of the fence.

Sediment fences serve no function along ridges or near drainage divides where there is little movement of water. Confining or diverting runoff unnecessarily with a sediment fence may create erosion and sedimentation problems that would not otherwise occur.

Straw barriers have only a 0-20% trapping efficiency and are inadequate. Straw bales may not be used in place of sediment fence. Prefabricated sediment fence with the fabric already stapled to thin wooden posts does not meet minimum standards specified later in this section.

Anchoring of sediment fence is critical. The toe of the fabric must be anchored in a trench backfilled with compacted earth. Mechanical compaction must be provided in order for the fence to effectively pond runoff.

Design Criteria Ensure that drainage area is no greater than ½ acre per 100 feet of fence. This is the maximum drainage area when the slope is less than 2 percent. Where all runoff is to be stored behind the fence, ensure that the maximum slope length behind a sediment fence does not exceed the specifications shown in Table 6.62a. The shorter slope length allowed for steeper slopes will greatly reduce the maximum drainage area. For example, a 10–20 % slope may have a maximum slope length of 25 feet. For a 100-foot length of sediment fence, the drainage area would be 25ft X 100ft = 2500sq.ft., or 0.06 acres.

Table 6.62a Maximum Slope Length and Slope for which Sediment Fence is Applicable

Slope	Slope Length (ft)	Maximum Area (ft²)
<2%	100	10,000
2 to 5%	75	7,500
5 to 10%	50	5,000
10 to 20%	25	2,500
>20%	15	1,500

Make the fence stable for the 10-year peak storm runoff.

Ensure that the depth of impounded water does not exceed 1.5 feet at any point along the fence.

If non-erosive outlets are provided, slope length may be increased beyond that shown in Table 6.62a, but runoff from the area should be determined and bypass capacity and erosion potential along the fence must be checked. The velocity of the flow at the outlet or along the fence should be in keeping with Table 8.05d, Appendix 8.05.

Provide a riprap splash pad or other outlet protection device for any point where flow may overtop the sediment fence, such as natural depressions or swales. Ensure that the maximum height of the fence at a protected, reinforced outlet does not exceed 2 feet and that support post spacing does not exceed 4 feet.

The design life of a synthetic sediment fence should be 6 months.

Construction Specifications

MATERIALS

1. Use a synthetic filter fabric of at least 95% by weight of polyolefins or polyester, which is certified by the manufacturer or supplier as conforming to the requirements in ASTM D 6461, which is shown in part in Table 6.62b.

Synthetic filter fabric should contain ultraviolet ray inhibitors and stabilizers to provide a minimum of 6 months of expected usable construction life at a temperature range of 0 to 120° F.

2. Ensure that posts for sediment fences are 1.25 lb/linear ft minimum steel with a minimum length of 5 feet. Make sure that steel posts have projections to facilitate fastening the fabric.

3. For reinforcement of standard strength filter fabric, use wire fence with a minimum 14 gauge and a maximum mesh spacing of 6 inches.

Table 6.62b Specifications For Sediment Fence Fabric

Temporary Silt Fence Material Property Requirements					
	Test Material	Units	Supported[1] Silt Fence	Un-Supported[1] Silt Fence	Type of Value
Grab Strength	ASTM D 4632	N (lbs)	400	550	MARV
Machine Direction			(90)	(90)	
X-Machine Direction			400	450	MARV
			(90)	(90)	
Permittivity[2]	ASTM D 4491	sec-1	0.05	0.05	MARV
Apparent Opening Size[3]	ASTM D 4751	mm	0.60	0.60	Max. ARV[4]
		(US Sieve #)	(30)	(30)	
Ultraviolet Stability	ASTM D 4355	% Retained Strength	70% after 500h of exposure	70% after 500h of exposure	Typical

[1] Silt Fence support shall consist of 14 gage steel wire with a mesh spacing of 150 mm (6 inches), or prefabricated polymer mesh of equivalent strength.
[2] These default values are based on empirical evidence with a variety of sediment. For environmentally sensitive areas, a review of previous experience and/or site or regionally specific geotextile tests in accordance with Test Method D 5141 should be performed by the agency to confirm suitability of these requirements.
[3] As measured in accordance with Test Method D 4632.
[4] As measured in accordance with Test Method D 4632.

CONSTRUCTION

1. Construct the sediment barrier of standard strength or extra strength synthetic filter fabrics.

2. Ensure that the height of the sediment fence does not exceed 24 inches above the ground surface. (Higher fences may impound volumes of water sufficient to cause failure of the structure.)

3. Construct the filter fabric from a continuous roll cut to the length of the barrier to avoid joints. When joints are necessary, securely fasten the filter cloth only at a support post with 4 feet minimum overlap to the next post.

4. Support standard strength filter fabric by wire mesh fastened securely to the **upslope** side of the posts. Extend the wire mesh support to the bottom of the trench. Fasten the wire reinforcement, then fabric on the upslope side of the fence post. Wire or plastic zip ties should have minimum 50 pound tensile strength.

5. When a wire mesh support fence is used, space posts a maximum of 8 feet apart. Support posts should be driven securely into the ground a minimum of 24 inches.

6. Extra strength filter fabric with 6 feet post spacing does not require wire mesh support fence. Securely fasten the filter fabric directly to posts. Wire or plastic zip ties should have minimum 50 pound tensile strength.

Installation Specifications

7. Excavate a trench approximately 4 inches wide and 8 inches deep along the proposed line of posts and upslope from the barrier (Figure 6.62a).

8. Place 12 inches of the fabric along the bottom and side of the trench.

9. Backfill the trench with soil placed over the filter fabric and compact. Thorough compaction of the backfill is critical to silt fence performance.

10. Do not attach filter fabric to existing trees.

SEDIMENT FENCE INSTALLATION USING THE SLICING METHOD

Instead of excavating a trench, placing fabric and then backfilling trench, sediment fence may be installed using specially designed equipment that inserts the fabric into a cut sliced in the ground with a disc (Figure 6.62b).

1. The base of both end posts should be at least one foot higher than the middle of the fence. Check with a level if necessary.

2. Install posts 4 feet apart in critical areas and 6 feet apart on standard applications.

3. Install posts 2 feet deep on the downstream side of the silt fence, and as close as possible to the fabric, enabling posts to support the fabric from upstream water pressure.

4. Install posts with the nipples facing away from the silt fabric.

5. Attach the fabric to each post with three ties, all spaced within the top 8 inches of the fabric. Attach each tie diagonally 45 degrees through the fabric, with each puncture at least 1 inch vertically apart. Also, each tie should be positioned to hang on a post nipple when tightened to prevent sagging.

6. Wrap approximately 6 inches of fabric around the end posts and secure with 3 ties.

7. No more than 24 inches of a 36 inch fabric is allowed above ground level.

8. The installation should be checked and corrected for any deviations before compaction.

9. Compaction is vitally important for effective results. Compact the soil immediately next to the silt fence fabric with the front wheel of the tractor, skid steer, or roller exerting at least 60 pounds per square inch. Compact the upstream side first, and then each side twice for a total of 4 trips.

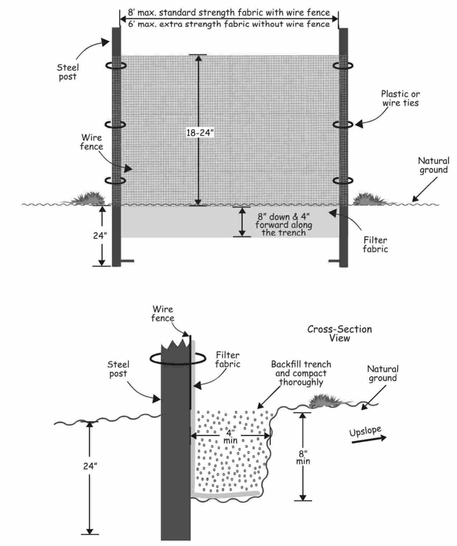

Figure 6.62a Installation detail of a sediment fence.

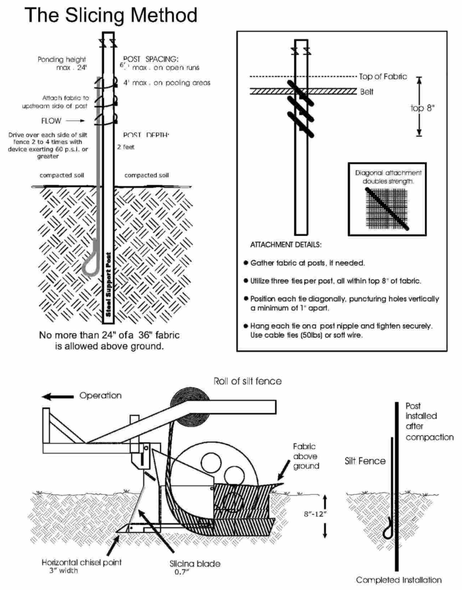

Vibratory plow is not acceptable because of horizontal compaction

Figure 6.62b Schematics for using the slicing method to install a sediment fence. Adapted from *Silt Fence that Works*

Maintenance Inspect sediment fences at least once a week and after each rainfall. Make any required repairs immediately.

Should the fabric of a sediment fence collapse, tear, decompose or become ineffective, replace it promptly.

Remove sediment deposits as necessary to provide adequate storage volume for the next rain and to reduce pressure on the fence. Take care to avoid undermining the fence during cleanout.

Remove all fencing materials and unstable sediment deposits and bring the area to grade and stabilize it after the contributing drainage area has been properly stabilized.

References ASTM D 6461 – 99. "Standard Specification for Silt Fence Materials" ASTM International. For referenced ASTM standards, visit the ASTM website, www.astm.org, or contact ASTM Customer Service at service@astm.org. For Annual Book of ASTM Standards volume information, refer to the standard's Document Summary page on the ASTM website.

ASTM D 6462 – 03. "Standard Practice for Silt Fence Installation" ASTM International. For referenced ASTM standards, visit the ASTM website, www.astm.org, or contact ASTM Customer Service at service@astm.org. For Annual Book of ASTM Standards volume information, refer to the standard's Document Summary page on the ASTM website.

C. Joel Sprague, PE, Silt Fence Performance Limits and Installation Requirements. Sprague and Sprague Consulting Engineers and TRI/Environmental, Inc.

Carpenter Erosion Control. http://www.tommy-sfm.com/

Kentucky Erosion Prevention and Sediment Control Field Manual, 2004.

Runoff Control Measures
6.20, Temporary Diversions

Outlet Protection
6.41, Outlet Stabilization Structure

Appendix
8.03, Estimating Runoff

6.10 **TEMPORARY SEEDING**

TS

Definition Planting rapid-growing annual grasses, small grains, or legumes to provide initial, temporary cover for erosion control on disturbed areas.

Purpose To temporarily stabilize denuded areas that will not be brought to final grade for a period of more than 21 calendar days.

Temporary seeding controls runoff and erosion until permanent vegetation or other erosion control measures can be established. In addition, it provides residue for soil protection and seedbed preparation, and reduces problems of mud and dust production from bare soil surfaces during construction.

Conditions Where Practice Applies On any cleared, unvegetated, or sparsely vegetated soil surface where vegetative cover is needed for less than 1 year. Applications of this practice include diversions, dams, temporary sediment basins, temporary road banks, and topsoil stockpiles.

Planning Considerations Annual plants, which sprout and grow rapidly and survive for only one season, are suitable for establishing initial or temporary vegetative cover. Temporary seeding preserves the integrity of earthen sediment control structures such as dikes, diversions, and the banks of dams and sediment basins. It can also reduce the amount of maintenance associated with these devices. For example, the frequency of sediment basin cleanouts will be reduced if watershed areas, outside the active construction zone, are stabilized.

Proper seedbed preparation, selection of appropriate species, and use of quality seed are as important in this Practice as in Practice 6.11, *Permanent Seeding*. Failure to follow established guidelines and recommendations carefully may result in an inadequate or short-lived stand of vegetation that will not control erosion.

Temporary seeding provides protection for no more than 1 year, during which time permanent stabilization should be initiated.

Specifications Complete grading before preparing seedbeds, and install all necessary erosion control practices such as, dikes, waterways, and basins. Minimize steep slopes because they make seedbed preparation difficult and increase the erosion hazard. If soils become compacted during grading, loosen them to a depth of 6-8 inches using a ripper, harrow, or chisel plow.

SEEDBED PREPARATION

Good seedbed preparation is essential to successful plant establishment. A good seedbed is well-pulverized, loose, and uniform. Where hydroseeding methods are used, the surface may be left with a more irregular surface of large clods and stones.

Lining—Apply lime according to soil test recommendations. If the pH (acidity) of the soil is not known, an application of ground agricultural limestone at the

rate of 1 to 1 1/2 tons/acre on coarse-textured soils and 2-3 tons/acre on fine-textured soils is usually sufficient. Apply limestone uniformly and incorporate into the top 4-6 inches of soil. Soils with a pH of 6 or higher need not be limed.

Fertilizer—Base application rates on soil tests. When these are not possible, apply a 10-10-10 grade fertilizer at 700-1,000 lb/acre. Both fertilizer and lime should be incorporated into the top 4-6 inches of soil. If a hydraulic seeder is used, do not mix seed and fertilizer more than 30 minutes before application.

Surface roughening—If recent tillage operations have resulted in a loose surface, additional roughening may not be required, except to break up large clods. If rainfall causes the surface to become sealed or crusted, loosen it just prior to seeding by disking, raking, harrowing, or other suitable methods. Groove or furrow slopes steeper than 3:1 on the contour before seeding (Practice 6.03, *Surface Roughening*).

PLANT SELECTION

Select an appropriate species or species mixture from Table 6.10a for seeding in late winter and early spring, Table 6.10b for summer, and Table 6.10c for fall.

In the Mountains, December and January seedings have poor chances of success. When it is necessary to plant at these times, use recommendations for fall and a securely tacked mulch.

SEEDING

Evenly apply seed using a cyclone seeder (broadcast), drill, cultipacker seeder, or hydroseeder. Use seeding rates given in Tables 6.10a-6.10c. Broadcast seeding and hydroseeding are appropriate for steep slopes where equipment cannot be driven. Hand broadcasting is not recommended because of the difficulty in achieving a uniform distribution.

Small grains should be planted no more than 1 inch deep, and grasses and legumes no more than 1/2 inch. Broadcast seed must be covered by raking or chain dragging, and then lightly firmed with a roller or cultipacker. Hydroseeded mixtures should include a wood fiber (cellulose) mulch.

MULCHING

The use of an appropriate mulch will help ensure establishment under normal conditions, and is essential to seeding success under harsh site conditions (Practice 6.14, *Mulching*). Harsh site conditions include:

- seeding in fall for winter cover (wood fiber mulches are not considered adequate for this use),
- slopes steeper than 3:1,
- excessively hot or dry weather,
- adverse soils (shallow, rocky, or high in clay or sand), and
- areas receiving concentrated flow.

If the area to be mulched is subject to concentrated waterflow, as in channels, anchor mulch with netting (Practice 6.14, *Mulching*).

Maintenance Reseed and mulch areas where seedling emergence is poor, or where erosion occurs, as soon as possible. Do not mow. Protect from traffic as much as possible.

References *Site Preparation*
6.03, Surface Roughening
6.04, Topsoiling

Surface Stabilization
6.11, Permanent Seeding
6.14, Mulching

Appendix
8.02, Vegetation Tables

Table 6.10a Temporary Seeding Recommendations for Late Winter and Early Spring

Seeding mixture Species	Rate (lb/acre)
Rye (grain)	120
Annual lespedeza (Kobe in Piedmont and Coastal Plain, Korean in Mountains)	50

Omit annual lespedeza when duration of temporary cover is not to extend beyond June.

Seeding dates
Mountains—Above 2500 feet: Feb. 15 - May 15
Below 2500 feet: Feb. 1- May 1
Piedmont—Jan. 1 - May 1
Coastal Plain—Dec. 1 - Apr. 15

Soil amendments
Follow recommendations of soil tests or apply 2,000 lb/acre ground agricultural limestone and 750 lb/acre 10-10-10 fertilizer.

Mulch
Apply 4,000 lb/acre straw. Anchor straw by tacking with asphalt, netting, or a mulch anchoring tool. A disk with blades set nearly straight can be used as a mulch anchoring tool.

Maintenance
Refertilize if growth is not fully adequate. Reseed, refertilize and mulch immediately following erosion or other damage.

Table 6.10b Temporary Seeding Recommendations for Summer

Seeding mixture Species	Rate (lb/acre)
German millet	40

In the Piedmont and Mountains, a small-stemmed Sudangrass may be substituted at a rate of 50 lb/acre.

Seeding dates
Mountains—May 15 - Aug. 15
Piedmont—May 1 - Aug. 15
Coastal Plain—Apr. 15 - Aug. 15

Soil amendments
Follow recommendations of soil tests or apply 2,000 lb/acre ground agricultural limestone and 750 lb/acre 10-10-10 fertilizer.

Mulch
Apply 4,000 lb/acre straw. Anchor straw by tacking with asphalt, netting, or a mulch anchoring tool. A disk with blades set nearly straight can be used as a mulch anchoring tool.

Maintenance
Repair and refertilize damaged areas immediately. Topdress with 50 lb/acre of nitrogen in March. If it is necessary to extent temporary cover beyond June 15, overseed with 50 lb/acre Kobe (Piedmont and Coastal Plain) or Korean (Mountains) lespedeza in late February or early March.

Table 6.10c Temporary Seeding Recommendations for Fall

Seeding mixture Species	Rate (lb/acre)
Rye (grain)	120

Seeding dates
Mountains—Aug. 15 - Dec. 15
Coastal Plain and Piedmont—Aug. 15 - Dec. 30

Soil amendments
Follow soil tests or apply 2,000 lb/acre ground agricultural limestone and 1,000 lb/acre 10-10-10 fertilizer.

Mulch
Apply 4,000 lb/acre straw. Anchor straw by tacking with asphalt, netting, or a mulch anchoring tool. A disk with blades set nearly straight can be used as a mulch anchoring tool.

Maintenance
Repair and refertilize damaged areas immediately. Topdress with 50 lb/acre of nitrogen in March. If it is necessary to extent temporary cover beyond June 15, overseed with 50 lb/acre Kobe (Piedmont and Coastal Plain) or Korean (Mountains) lespedeza in late February or early March.

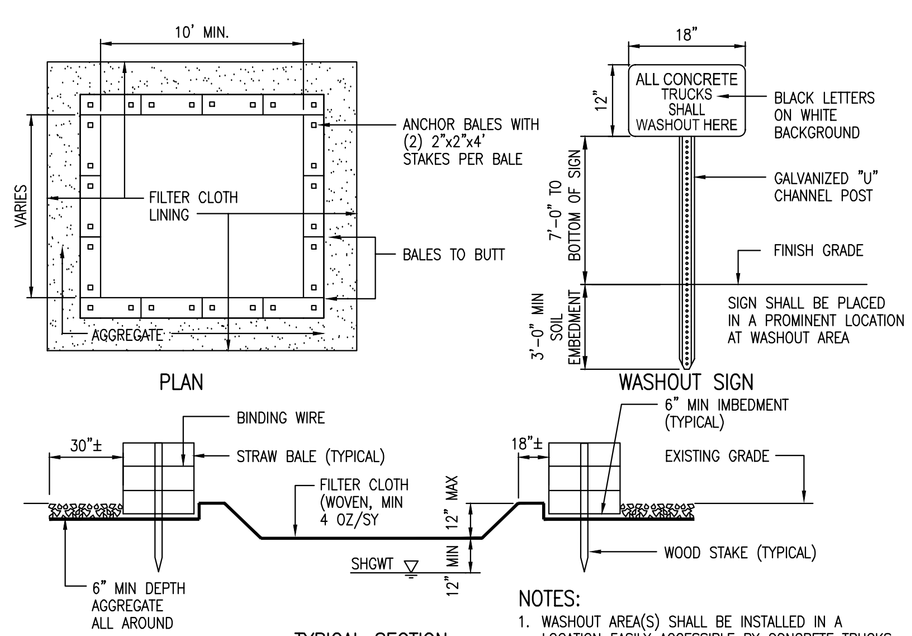

CONCRETE WASHOUT AREA DETAIL

NOT TO SCALE

NOTES:
1. WASHOUT AREA(S) SHALL BE INSTALLED IN A LOCATION EASILY ACCESSIBLE BY CONCRETE TRUCKS.
2. ONE OR MORE AREAS MAY BE INSTALLED ON THE CONSTRUCTION SITE AND MAY BE RELOCATED AS CONSTRUCTION PROGRESSES.
3. AT LEAST WEEKLY REMOVE ACCUMULATION OF SAND AND AGGREGATE AND DISPOSE OF PROPERLY.

Approved Construction Plan
Name Date
Planning
Traffic
Fire

SWPPP DETAILS
5 OF 5

REVISIONS	BY

FREELAND and KAUFFMAN, INC.
Engineers * Landscape Architects
209 West Stone Avenue
Greenville, South Carolina 29609
864-233-5497

PRELIMINARY NOT FOR CONSTRUCTION

AAA CAR WASH
WILMINGTON, NC
MPV PROPERTIES
2400 SOUTH BOULEVARD #300
CHARLOTTE, NC 28203
(704)-248-2100

DRAWN	AJW
CHECKED	BTS
DATE	6/17/2019
SCALE	AS NOTED
DRAWING	18

LEGEND

- (A) 4" SANITARY SEWER EXIT, (IE = 51'), (RE: ARCH) FOR EXACT LOCATION
- (B) 2" DOMESTIC WATERLINE ENTRY, (RE: ARCH) FOR EXACT LOCATION
- (C) 90° BEND
- (D) PAD MOUNTED TRANSFORMER, PENDING DUKE ENERGY UTILITY COMPANY REVIEW
- (E) CT CABINET FOR ELECTRIC ENTRY, (RE: ARCH) FOR EXACT LOCATION
- (F) GAS ENTRY, (RE: ARCH) FOR EXACT LOCATION
- (G) TELEPHONE ENTRY, (RE: ARCH) FOR EXACT LOCATION
- (H) 2" DOMESTIC WATER METER
- (I) SANITARY SEWER CLEAN-OUT, SEE DETAILS
- (J) NATURAL GAS LINE EXTENSION PENDING COORDINATION WITH PIEDMONE NATURAL GAS UTILITY COMPANY, CONTRACTOR RESPONSIBLE FOR ACQUIRING ALL PERMITS FOR WORK WITHIN R/W.
- (K) 2" WATERLINE
- (L) 6" SANITARY SEWER LINE PER CAPE FEAR PUBLIC UTILITY AUTHORITY SPECIFICATIONS
- (M) UNDERGROUND ELECTRIC EXTENSIONS, CONTRACTOR TO COORDINATE WITH UTILITY COMPANIES
- (N) 16"X2" TAPPING SLEEVE AND VALVE
- (O) 2" RPZ BACKFLOW, SEE DETAILS
- (P) 2" IRRIGATION WATER METER
- (Q) UNDERGROUND TELEPHONE EXTENSIONS, CONTRACTOR TO COORDINATE WITH UTILITY COMPANIES
- (R) OIL WATER SEPARATOR (OS-1000), SEE DETAIL
- (S) 4" PIPE FROM TRENCH DRAIN AT EXIT END OF TUNNEL TO OIL WATER SEPARATOR (RE: ARCH)

CITY OF WILMINGTON PLAN NOTES

1. WATER AND SEWER SERVICE SHALL MEET CAPE FEAR PUBLIC UTILITY AUTHORITY (CFPUA) DETAILS AND SPECIFICATIONS.

2. PROJECT SHALL COMPLY WITH CFPUA CROSS CONNECTION CONTROL REQUIREMENTS. WATER METER(S) CANNOT BE RELEASED UNTIL ALL REQUIREMENTS ARE MET AND THE STATE HAS GIVEN THEIR FINAL APPROVAL. CALL 910-332-6558 FOR INFORMATION.

3. IF THE CONTRACTOR DESIRES CFPUA WATER FOR CONSTRUCTION, HE SHALL APPLY IN ADVANCE FOR THIS SERVICE AND MUST PROVIDE A REDUCED PRESSURE ZONE (RPZ) BACKFLOW PREVENTION DEVICE ON THE DEVELOPER'S SIDE OF THE WATER METER BOX.

4. ANY IRRIGATION SYSTEM SUPPLIED BY CFPUA WATER SHALL COMPLY WITH THE CFPUA CROSS CONNECTION CONTROL REGULATIONS. CALL 910-332-6558 FOR INFORMATION.

5. ANY IRRIGATION SYSTEM SHALL BE EQUIPPED WITH A RAIN AND FREEZER SENSOR.

6. ANY BACKFLOW PREVENTION DEVICES REQUIRED BY THE CFPUA WILL NEED TO BE ON THE LIST OF APPROVED DEVICES BY USCFCCCHR OR ASSE.

7. CONTRACTOR TO FIELD VERIFY EXISTING WATER AND SEWER SERVICE LOCATIONS, SIZES AND MATERIALS PRIOR TO CONSTRUCTION. ENGINEER TO BE NOTIFIED OF ANY CONFLICTS.

8. UNDERGROUND FINE LINE(S) MUST BE PERMITTED AND INSPECTED BY THE WILMINGTON FIRE DEPARTMENT FROM THE PUBLIC RIGHT-OF-WAY TO THE BUILDING. CONTACT THE WILMINGTON FIRE DEPARTMENT DIVISION OF FIRE AND LIFE SAFETY AT 910-341-0696.

PRE-CON REQUIRED PRIOR TO CONSTRUCTION

FEES TO BE PAID PRIOR TO PRE-CON OR AT TIME OF BUILDING PERMIT APPLICATION

CONTRACTOR SHALL COORDINATE WITH ARCHITECTUAL AND EQUIPMENT DRAWINGS FOR NUMBER AND LOCATIONS ON CONDUITS

CONTRACTOR TO PROVIDE REQUIRED CONDUITS FOR SITE LIGHTING

- ❑ Water: _____ GPD (current use)
- ❑ Water: _____ GPD (proposed use)
- ❑ Sewer: _____ GPD (current use)
- ❑ Sewer: _____ GPD (proposed use)

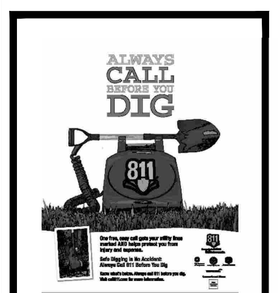

EVERY DIGGING JOB REQUIRES A CALL - EVEN SMALL PROJECTS LIKE PLANTING TREES OR SHRUBS. IF YOU HIT AN UNDERGROUND UTILITY LINE WHILE DIGGING, YOU CAN HARM YOURSELF OR THOSE AROUND YOU, DISRUPT SERVICE TO AN ENTIRE NEIGHBORHOOD AND POTENTIALLY BE RESPONSIBLE FOR FINES AND REPAIR COSTS.

SMART DIGGING MEANS CALLING 811 BEFORE EACH JOB. WHETHER YOU ARE A HOMEOWNER OR A PROFESSIONAL EXCAVATOR, ONE CALL TO 811 GETS YOUR UNDERGROUND UTILITY LINES MARKED FOR FREE.

Approved Construction Plan

	Name	Date
Planning		
Traffic		
Fire		

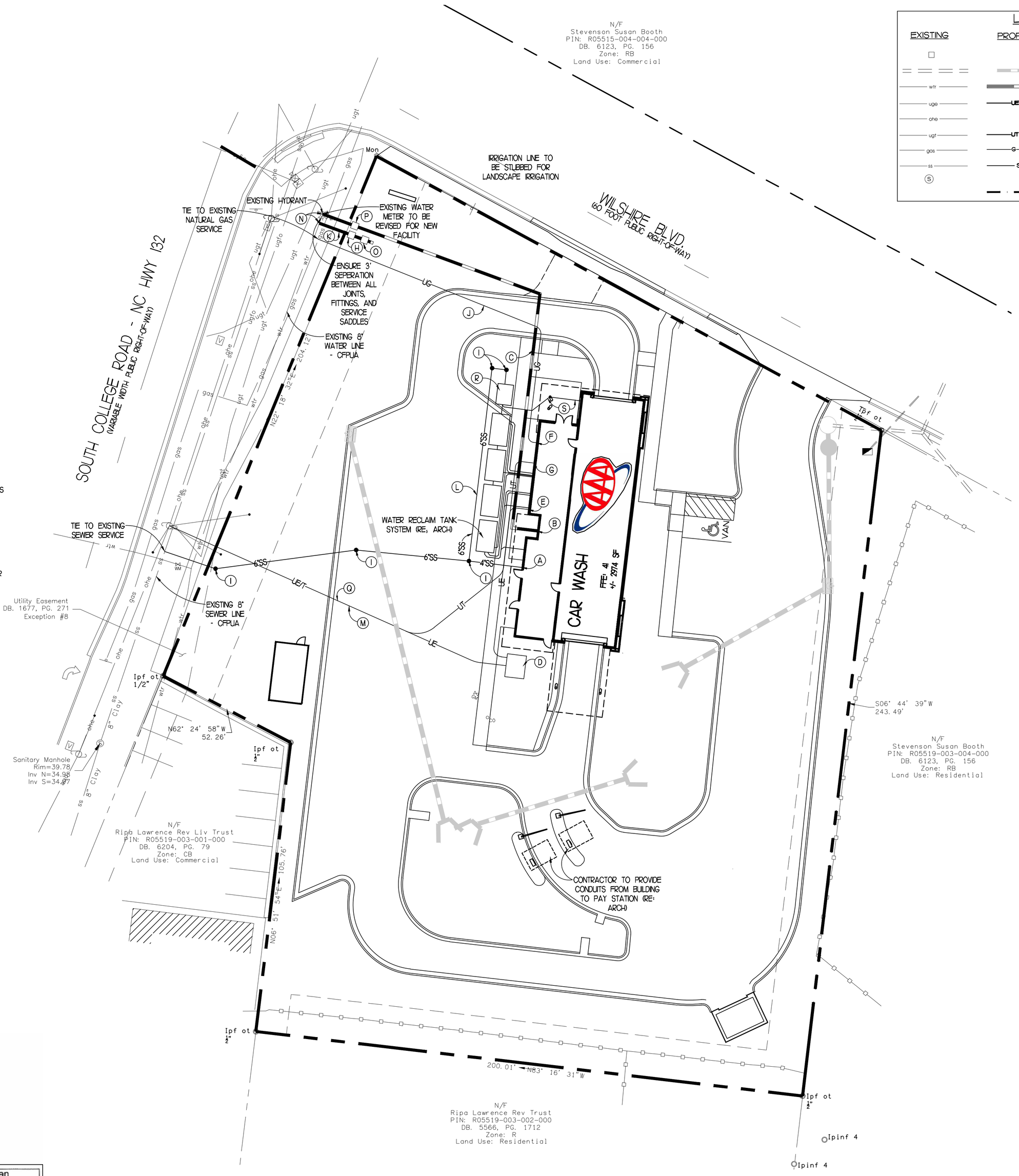

LEGEND

EXISTING	PROPOSED	DESCRIPTION
□	■	STORM DRAIN INLET
		STORM DRAIN PIPE
wtr		WATER LINE
upe	UE	UNDERGROUND ELECTRIC LINE
ohe		OVERHEAD ELECTRIC LINE
ugt	UT	UNDERGROUND TELEPHONE LINE
gas	G	GAS LINE
ss	SS	SANITARY SEWER LINE
Ⓢ		MANHOLE
		LIMITS OF DISTURBANCE

SITE UTILITY NOTES

1. ALL SITE WORK SHALL BE DONE IN ACCORDANCE WITH THE PLANS PREPARED BY FREELAND & KAUFFMAN, INC., THE CURRENT REQUIREMENTS THE CITY OF WILMINGTON, THE APPLICABLE SECTIONS OF THE NCDOT ROADWAY DESIGN MANUAL, AND ALL OTHER PERTINENT FEDERAL AND STATE LAWS.

2. THE CONTRACTOR SHALL COMPLY AT ALL TIMES WITH APPLICABLE FEDERAL, STATE AND LOCAL LAWS, PROVISIONS, AND POLICIES GOVERNING SAFETY AND HEALTH, INCLUDING THE FEDERAL CONSTRUCTION SAFETY ACT (PUBLIC LAW 91-54), FEDERAL REGISTER, CHAPTER XVII, PART 1926 OF TITLE 29 REGULATIONS, OCCUPATIONAL SAFETY AND HEALTH REGULATIONS FOR CONSTRUCTION, AND SUBSEQUENT PUBLICATIONS UPDATING THESE REGULATIONS.

3. THE CONTRACTOR SHALL BE RESPONSIBLE FOR EXAMINING THE AREAS AND CONDITIONS UNDER WHICH THE PROJECT IS TO BE CONSTRUCTED PRIOR TO THE SUBMISSION OF A BID. SUBMISSION OF A BID SHALL BE CONSTRUED TO MEAN THE CONTRACTOR HAS REVIEWED THE SITE AND IS FAMILIAR WITH CONDITIONS AND CONSTRAINTS OF THE SITE.

4. BEFORE EXCAVATION, ALL UNDERGROUND UTILITIES SHALL BE LOCATED IN THE FIELD BY THE PROPER AUTHORITIES. THE CONTRACTOR SHALL NOTIFY "CALL BEFORE YOU DIG" AT 811. THE LOCATION OF ALL UTILITIES AND UNDERGROUND STRUCTURES ARE APPROXIMATE AND MAY NOT ALL BE SHOWN. IT IS THE RESPONSIBILITY OF THE CONTRACTOR TO DETERMINE THE EXISTENCE AND EXACT LOCATION OF ALL UTILITIES AND UNDERGROUND STRUCTURES.

5. IT IS THE RESPONSIBILITY OF THE CONTRACTOR TO BID AND PERFORM ALL UTILITY WORK IN COMPLIANCE TO ALL APPLICABLE LOCAL AND STATE CODES AND REGULATIONS.

6. THE CONTRACTOR SHALL BE RESPONSIBLE FOR ALL FEES ASSOCIATED WITH THE INSTALLATION, INSPECTING, TESTING AND FINAL ACCEPTANCE OF ALL PROPOSED UTILITIES CONSTRUCTION.

7. CONTRACTOR SHALL COORDINATE WITH THE APPROPRIATE UTILITY COMPANY ON THE ADDITION, REMOVAL AND/OR RELOCATION OF UTILITIES AND UTILITY POLES AND THE EXTENSION OF ALL PROPOSED UTILITIES TO AAA STORE.

8. ALL UTILITIES SHALL BE INSTALLED IN ACCORDANCE WITH THE SPECIFICATIONS OF THE RESPECTIVE UTILITY COMPANY. IT IS THE RESPONSIBILITY OF THE CONTRACTOR TO ENSURE ALL UTILITIES ARE INSTALLED CORRECTLY TO MEET PROJECT REQUIREMENTS WHETHER PERFORMED BY THE CONTRACTOR OR NOT.

9. AN AS-BUILT DRAWING OF NEW UTILITY SERVICES SHALL BE PREPARED BY THE CONTRACTOR AND SUBMITTED TO THE OWNER UPON COMPLETION OF THE PROJECT.

10. UTILITY COMPANIES AND CONTACTS ARE LISTED ON COVER SHEET.

11. CONDUIT LOCATIONS TO PYLON SIGNS AND SITE LIGHT POLES TO BE COORDINATED WITH AAA.

12. CONTRACTOR SHALL COORDINATE WITH AAA ON TYPE AND SIZE OF THE GREASE TRAP. ALL SANITARY SEWER PIPE SPECIFICATION PROVIDED ELSEWHERE.

13. CONTRACTOR SHALL COORDINATE WITH AAA ON CONDUIT ROUTE TO STORE FROM THE TRANSFORMER AND/OR SERVICE UTILITY POLE FOR TELEPHONE AND ELECTRICAL SERVICES.

14. CONTRACTOR SHALL REFER TO OTHER PLANS WITHIN THIS CONSTRUCTION SET FOR OTHER PERTINENT INFORMATION.

15. ALL FILL MATERIAL IS TO BE IN PLACE, AND COMPACTED BEFORE INSTALLATION OF PROPOSED UTILITIES.

16. CONTRACTOR SHALL NOTIFY THE UTILITY AUTHORITIES INSPECTORS 72 HOURS BEFORE CONNECTING TO ANY EXISTING LINE. UTILITY COMPANIES AND CONTACTS ARE LISTED ON THE COVER SHEET.

17. SANITARY SEWER PIPE SHALL BE IN ACCORDANCE WITH CFPUA SPECS 02731.

18. WATER LINES SHALL BE IN ACCORDANCE WITH CFPUA SPECS 02660.

19. MINIMUM TRENCH WIDTH SHALL BE 2 FEET.

20. WATER AND SEWER LINES SHOULD BE KEPT TEN (10') APART (PARALLEL) OR WHEN CROSSING 18" VERTICAL CLEARANCE (OUTSIDE EDGE OF PIPE TO OUTSIDE EDGE OF PIPE).

21. CONTRACTOR SHALL MAINTAIN A MINIMUM OF 3'-0" COVER ON ALL WATERLINES.

22. IN THE EVENT OF A VERTICAL CROSSING LESS THAN 18" BETWEEN WATERLINES AND SANITARY LINES (EXISTING AND PROPOSED), THE SANITARY LINE SHALL BE DUCTILE IRON PIPE WITH MECHANICAL JOINTS AT LEAST 10 FEET ON BOTH SIDES OF CROSSING. THE WATERLINE SHALL HAVE MECHANICAL JOINTS WITH APPROPRIATE THRUST BLOCKING AS REQUIRED. MEETING REQUIREMENTS OF ANSI A210 OR ANSI 211 (AWWA C-150 (CLASS 50).

23. LINES UNDERGROUND SHALL BE INSTALLED, INSPECTED AND APPROVED BEFORE BACKFILLING.

24. TOPS OF EXISTING MANHOLES SHALL BE ADJUSTED AS NECESSARY TO BE FLUSH WITH PROPOSED PAVEMENT ELEVATIONS, AND TO BE ONE FOOT ABOVE FINISHED GROUND ELEVATIONS WITH WATER TIGHT LIDS.

25. ALL CONCRETE FOR ENCASEMENTS SHALL HAVE A MINIMUM 28 DAY COMPRESSION STRENGTH AT 3000 P.S.I.

26. REFER TO INTERIOR PLUMBING DRAWINGS FOR TIE-IN OF ALL UTILITIES.

UTILITY PLAN

SCALE 1" = 20'

REVISIONS	BY

FREELAND and KAUFFMAN, INC.
Engineers * Landscape Architects
209 West Stone Avenue
Greenville, South Carolina 29609
864-233-5497

PRELIMINARY NOT FOR CONSTRUCTION

AAA CAR WASH
WILMINGTON, NC
MPV PROPERTIES
2400 SOUTH BOULEVARD #300
CHARLOTTE, NC 28203
(704)-248-2100

DRAWN	AJW
CHECKED	BTS
DATE	6/17/2019
SCALE	AS NOTED
DRAWING	19

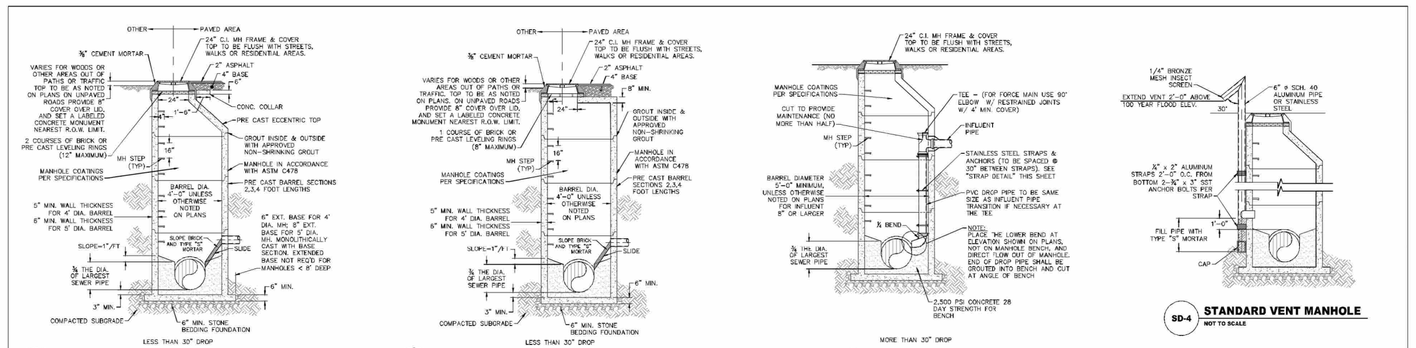

SD-1 PRECAST CONCRETE OFFSET MANHOLE TYPICAL
NOT TO SCALE

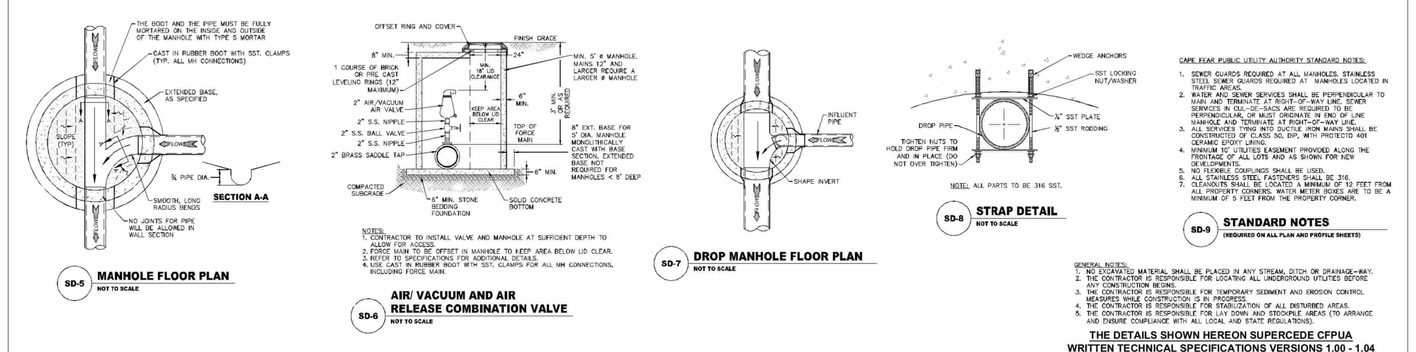

SD-2 PRECAST CONCRETE FLAT TOP MANHOLE TYPICAL
NOT TO SCALE

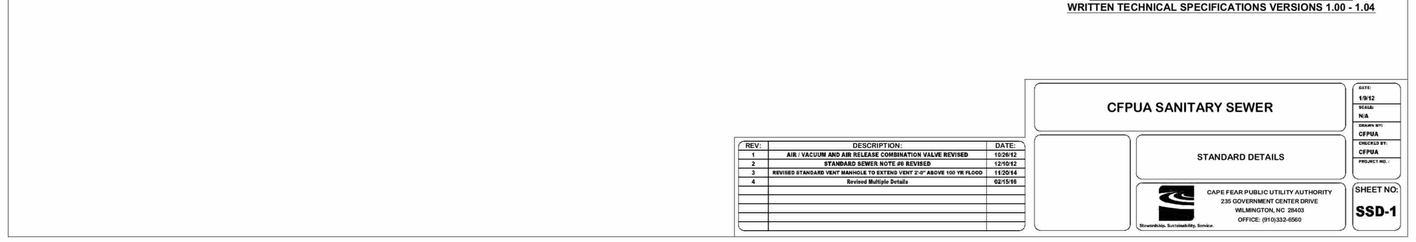

SD-3 DROP MANHOLE
NOT TO SCALE

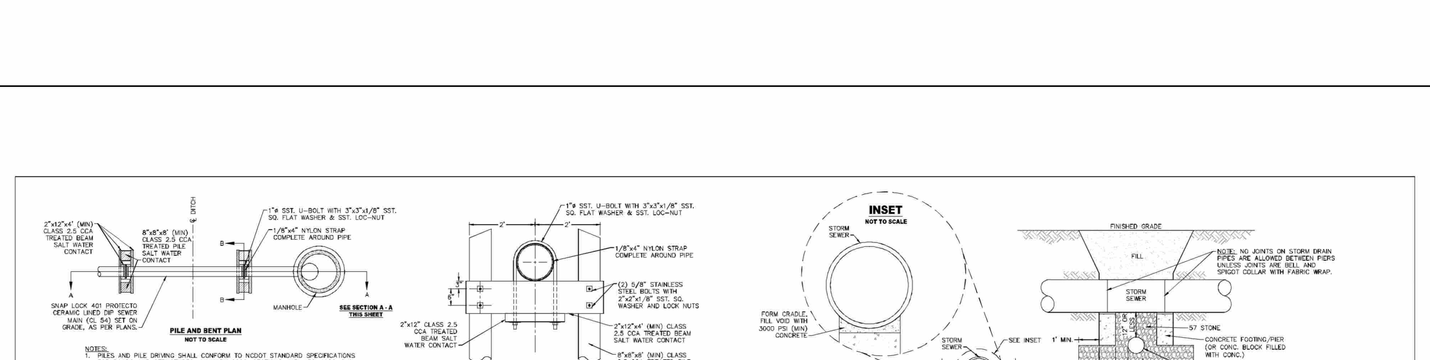

SD-4 STANDARD VENT MANHOLE
NOT TO SCALE

SD-5 MANHOLE FLOOR PLAN
NOT TO SCALE

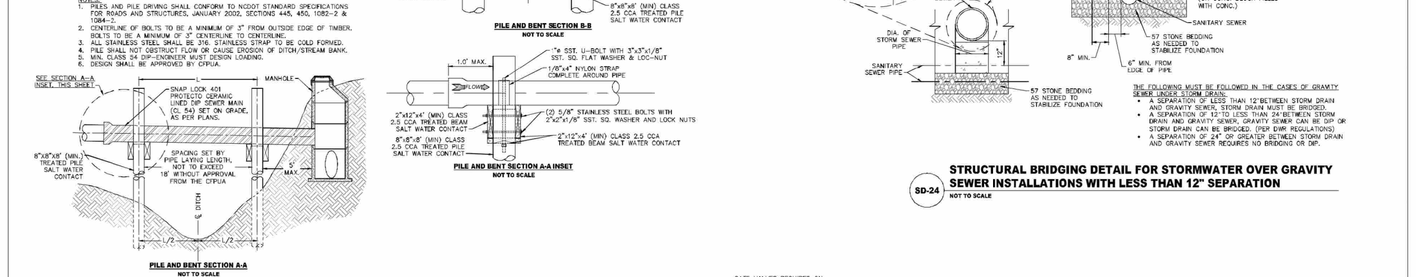

SD-6 AIR/ VACUUM AND AIR RELEASE COMBINATION VALVE
NOT TO SCALE

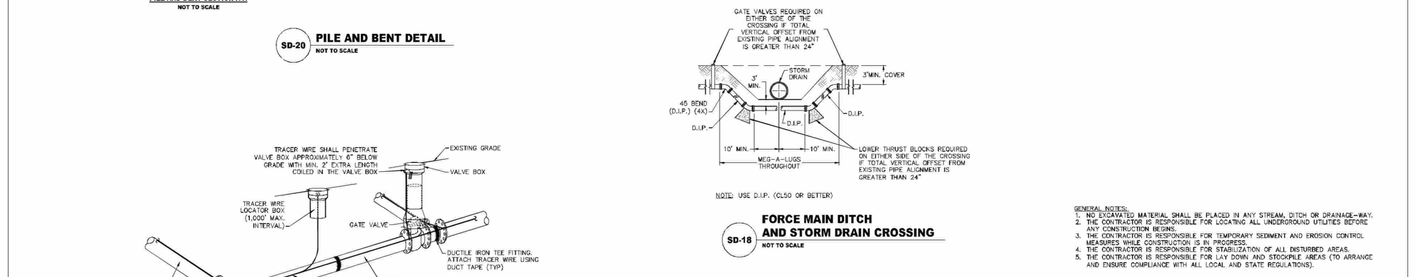

SD-7 DROP MANHOLE FLOOR PLAN
NOT TO SCALE

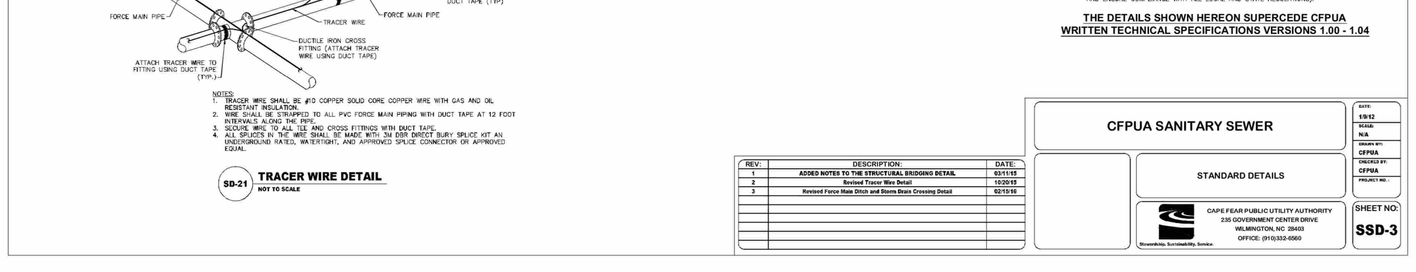

SD-8 STRAP DETAIL
NOT TO SCALE

SD-9 STANDARD NOTES
(REQUIRED ON ALL PLAN AND PROFILE SHEETS)

GENERAL NOTES:
1. NO EXCAVATED MATERIAL SHALL BE PLACED IN ANY STREAM, DITCH OR DRAINAGE-WAY.
2. THE CONTRACTOR IS RESPONSIBLE FOR LOCATING ALL UNDERGROUND UTILITIES BEFORE ANY CONSTRUCTION BEGINS.
3. THE CONTRACTOR IS RESPONSIBLE FOR TEMPORARY SEDIMENT AND EROSION CONTROL MEASURES DURING CONSTRUCTION OF THIS PROJECT.
4. THE CONTRACTOR IS RESPONSIBLE FOR STABILIZATION OF ALL DISTURBED AREAS.
5. THE CONTRACTOR IS RESPONSIBLE FOR LAY DOWN AND STOCKPILE AREAS (TO ARRANGE AND OBTAIN COMPLIANCE WITH ALL LOCAL AND STATE REGULATIONS).

THE DETAILS SHOWN HEREON SUPERCEDE CFPUA
WRITTEN TECHNICAL SPECIFICATIONS VERSIONS 1.00 - 1.04

CFPUA SANITARY SEWER

STANDARD DETAILS

CAPE FEAR PUBLIC UTILITY AUTHORITY
235 GOVERNMENT CENTER DRIVE
WILMINGTON, NC 28403
OFFICE: (910)332-6565

Stewardship. Sustainability. Service.

REV:	DESCRIPTION:	DATE:
1	AIR/ VACUUM AND AIR RELEASE COMBINATION VALVE REVISED	12/20/12
2	STANDARD SEWER NOTE #9 ADDED	12/19/12
3	REVISED STANDARD FRAT MANHOLE TO SYSTEM CONF 2.4" ABOVE 100 YR PLAIN	10/28/14
4	Revised Multiple Details	02/13/19

DATE: 1/9/12
SCALE: N.A.
DRAWN BY: CFPUA
CHECKED BY: CFPUA
PROJECT NO.:

SHEET NO.
SSD-1

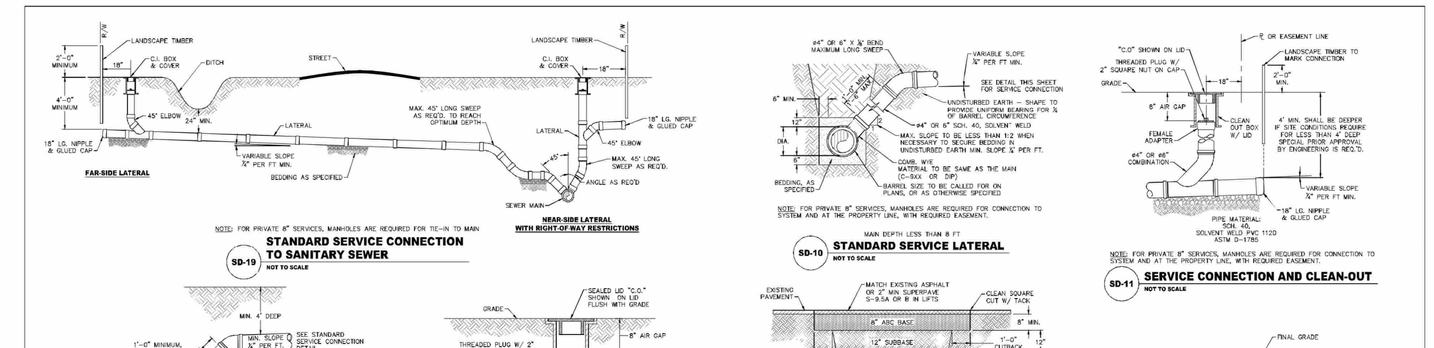

SD-10 STANDARD SERVICE CONNECTION TO SANITARY SEWER
NOT TO SCALE

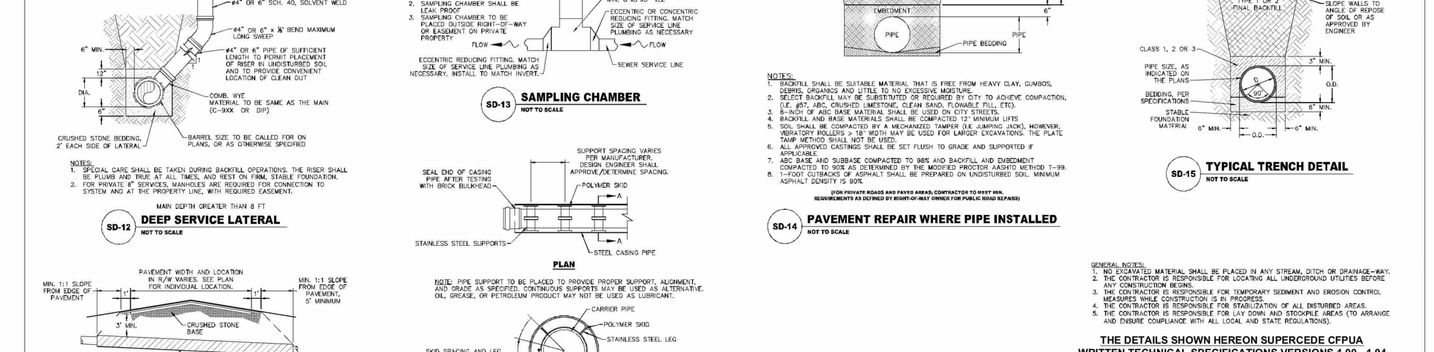

SD-11 SERVICE CONNECTION AND CLEAN-OUT
NOT TO SCALE

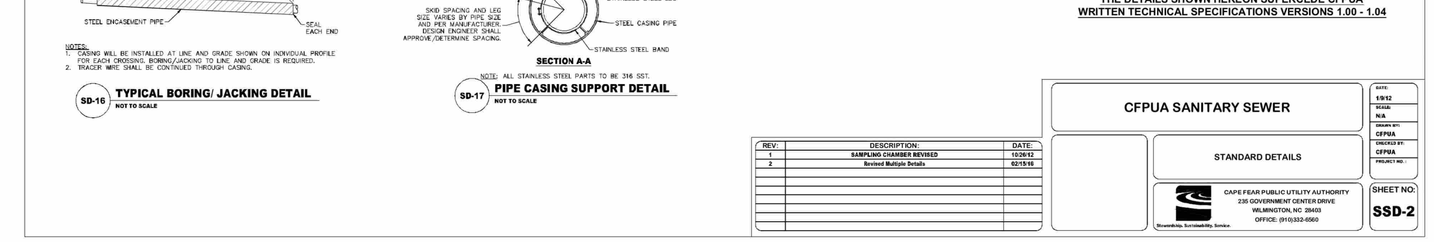

SD-12 DEEP SERVICE LATERAL
NOT TO SCALE

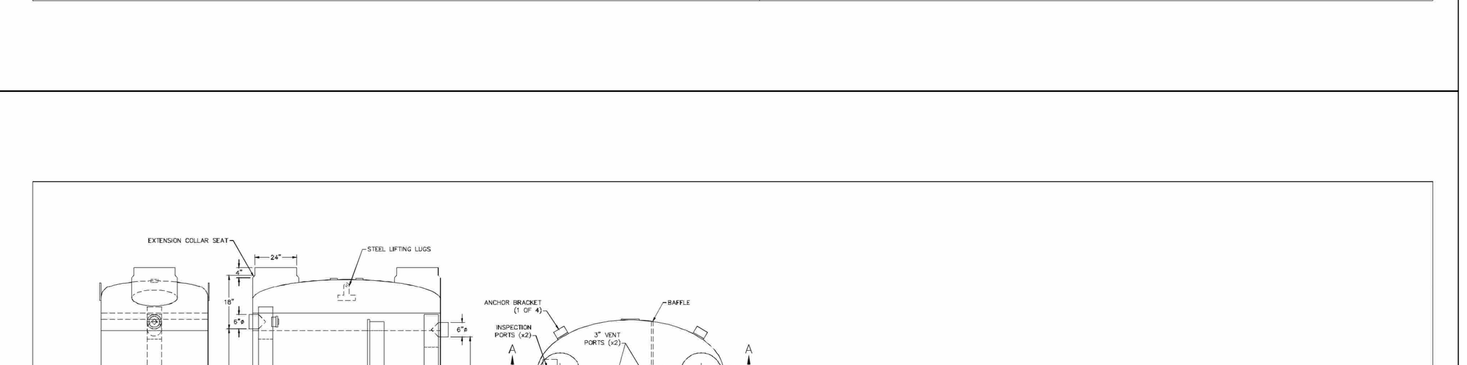

SD-13 SAMPLING CHAMBER
NOT TO SCALE

SD-14 PAVEMENT REPAIR WHERE PIPE INSTALLED
NOT TO SCALE

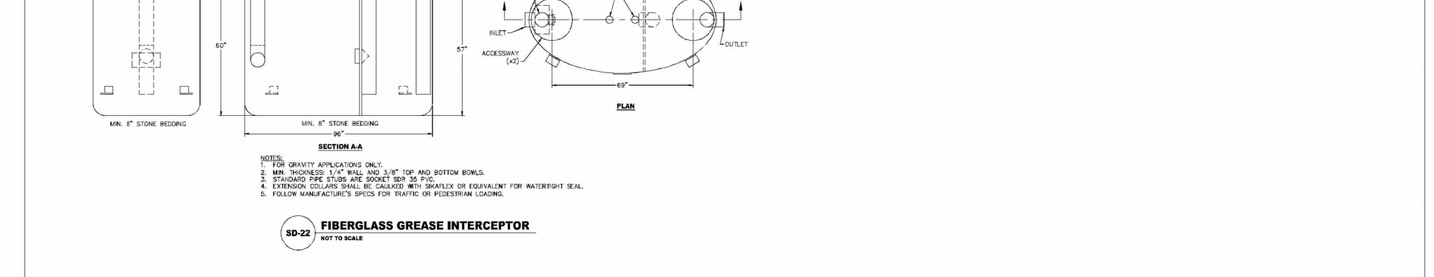

SD-15 TYPICAL TRENCH DETAIL
NOT TO SCALE

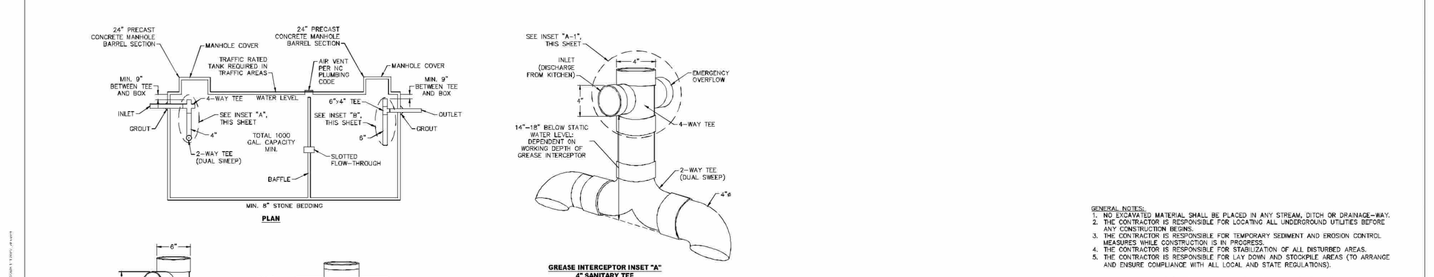

SD-16 TYPICAL BORING/ JACKING DETAIL
NOT TO SCALE

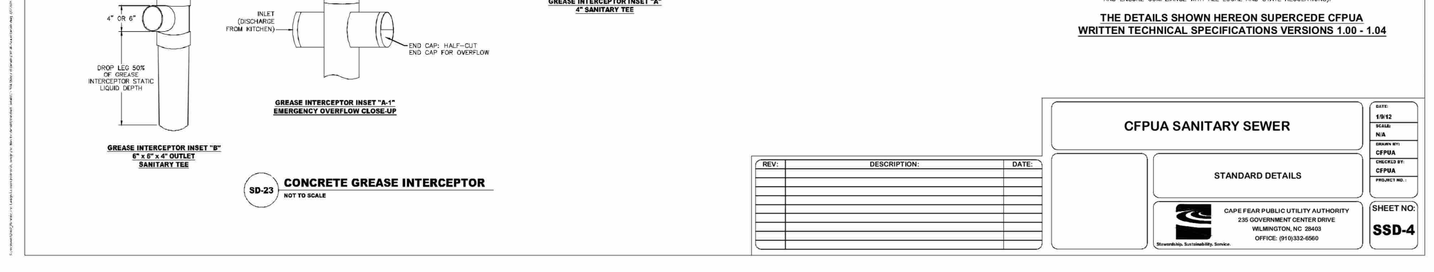

SD-17 PIPE CASING SUPPORT DETAIL
NOT TO SCALE

GENERAL NOTES:
1. NO EXCAVATED MATERIAL SHALL BE PLACED IN ANY STREAM, DITCH OR DRAINAGE-WAY.
2. THE CONTRACTOR IS RESPONSIBLE FOR LOCATING ALL UNDERGROUND UTILITIES BEFORE ANY CONSTRUCTION BEGINS.
3. THE CONTRACTOR IS RESPONSIBLE FOR TEMPORARY SEDIMENT AND EROSION CONTROL MEASURES DURING CONSTRUCTION OF THIS PROJECT.
4. THE CONTRACTOR IS RESPONSIBLE FOR STABILIZATION OF ALL DISTURBED AREAS.
5. THE CONTRACTOR IS RESPONSIBLE FOR LAY DOWN AND STOCKPILE AREAS (TO ARRANGE AND OBTAIN COMPLIANCE WITH ALL LOCAL AND STATE REGULATIONS).

THE DETAILS SHOWN HEREON SUPERCEDE CFPUA
WRITTEN TECHNICAL SPECIFICATIONS VERSIONS 1.00 - 1.04

CFPUA SANITARY SEWER

STANDARD DETAILS

CAPE FEAR PUBLIC UTILITY AUTHORITY
235 GOVERNMENT CENTER DRIVE
WILMINGTON, NC 28403
OFFICE: (910)332-6565

Stewardship. Sustainability. Service.

REV:	DESCRIPTION:	DATE:
1	SAMPLING CHAMBER REVISED	10/29/19
2	Revised Multiple Details	02/13/19

DATE: 1/9/12
SCALE: N.A.
DRAWN BY: CFPUA
CHECKED BY: CFPUA
PROJECT NO.:

SHEET NO.
SSD-2

SD-20 PILE AND BENT DETAIL
NOT TO SCALE

SD-21 TRACER WIRE DETAIL
NOT TO SCALE

SD-24 STRUCTURAL BRIDGING DETAIL FOR STORMWATER OVER GRAVITY SEWER INSTALLATIONS WITH LESS THAN 12" SEPARATION
NOT TO SCALE

SD-19 FORCE MAIN DITCH AND STORM DRAIN CROSSING
NOT TO SCALE

GENERAL NOTES:
1. NO EXCAVATED MATERIAL SHALL BE PLACED IN ANY STREAM, DITCH OR DRAINAGE-WAY.
2. THE CONTRACTOR IS RESPONSIBLE FOR LOCATING ALL UNDERGROUND UTILITIES BEFORE ANY CONSTRUCTION BEGINS.
3. THE CONTRACTOR IS RESPONSIBLE FOR TEMPORARY SEDIMENT AND EROSION CONTROL MEASURES DURING CONSTRUCTION OF THIS PROJECT.
4. THE CONTRACTOR IS RESPONSIBLE FOR STABILIZATION OF ALL DISTURBED AREAS.
5. THE CONTRACTOR IS RESPONSIBLE FOR LAY DOWN AND STOCKPILE AREAS (TO ARRANGE AND OBTAIN COMPLIANCE WITH ALL LOCAL AND STATE REGULATIONS).

THE DETAILS SHOWN HEREON SUPERCEDE CFPUA
WRITTEN TECHNICAL SPECIFICATIONS VERSIONS 1.00 - 1.04

CFPUA SANITARY SEWER

STANDARD DETAILS

CAPE FEAR PUBLIC UTILITY AUTHORITY
235 GOVERNMENT CENTER DRIVE
WILMINGTON, NC 28403
OFFICE: (910)332-6565

Stewardship. Sustainability. Service.

REV:	DESCRIPTION:	DATE:
1	ADDED NOTES TO THE STRUCTURAL BRIDGING DETAIL	10/31/11
2	Revised Multiple Details	02/13/19
3	Revised Force Main Ditch and Storm Drain Crossing Detail	02/13/19

DATE: 1/9/12
SCALE: N.A.
DRAWN BY: CFPUA
CHECKED BY: CFPUA
PROJECT NO.:

SHEET NO.
SSD-3

SD-22 FIBERGLASS GREASE INTERCEPTOR
NOT TO SCALE

SD-23 CONCRETE GREASE INTERCEPTOR
NOT TO SCALE

GENERAL NOTES:
1. NO EXCAVATED MATERIAL SHALL BE PLACED IN ANY STREAM, DITCH OR DRAINAGE-WAY.
2. THE CONTRACTOR IS RESPONSIBLE FOR LOCATING ALL UNDERGROUND UTILITIES BEFORE ANY CONSTRUCTION BEGINS.
3. THE CONTRACTOR IS RESPONSIBLE FOR TEMPORARY SEDIMENT AND EROSION CONTROL MEASURES DURING CONSTRUCTION OF THIS PROJECT.
4. THE CONTRACTOR IS RESPONSIBLE FOR STABILIZATION OF ALL DISTURBED AREAS.
5. THE CONTRACTOR IS RESPONSIBLE FOR LAY DOWN AND STOCKPILE AREAS (TO ARRANGE AND OBTAIN COMPLIANCE WITH ALL LOCAL AND STATE REGULATIONS).

THE DETAILS SHOWN HEREON SUPERCEDE CFPUA
WRITTEN TECHNICAL SPECIFICATIONS VERSIONS 1.00 - 1.04

CFPUA SANITARY SEWER

STANDARD DETAILS

CAPE FEAR PUBLIC UTILITY AUTHORITY
235 GOVERNMENT CENTER DRIVE
WILMINGTON, NC 28403
OFFICE: (910)332-6565

Stewardship. Sustainability. Service.

REV:	DESCRIPTION:	DATE:

DATE: 1/9/12
SCALE: N.A.
DRAWN BY: CFPUA
CHECKED BY: CFPUA
PROJECT NO.:

SHEET NO.
SSD-4

UTILITY DETAILS 1 OF 2

REVISIONS	BY

FREELAND and KAUFFMAN, INC.
Engineers * Landscape Architects
209 West Stone Avenue
Greenville, South Carolina 29609
864-233-5497

PRELIMINARY NOT FOR CONSTRUCTION

AAA CAR WASH
WILMINGTON, NC
MPV PROPERTIES
2400 SOUTH BOULEVARD #300
CHARLOTTE, NC 28203
(704)-248-2100

DRAWN
AJW
CHECKED
BTS
DATE
6/17/2019
SCALE
AS NOTED

DRAWING
20

Approved Construction Plan

	Name	Date
Planning		
Traffic		
Fire		

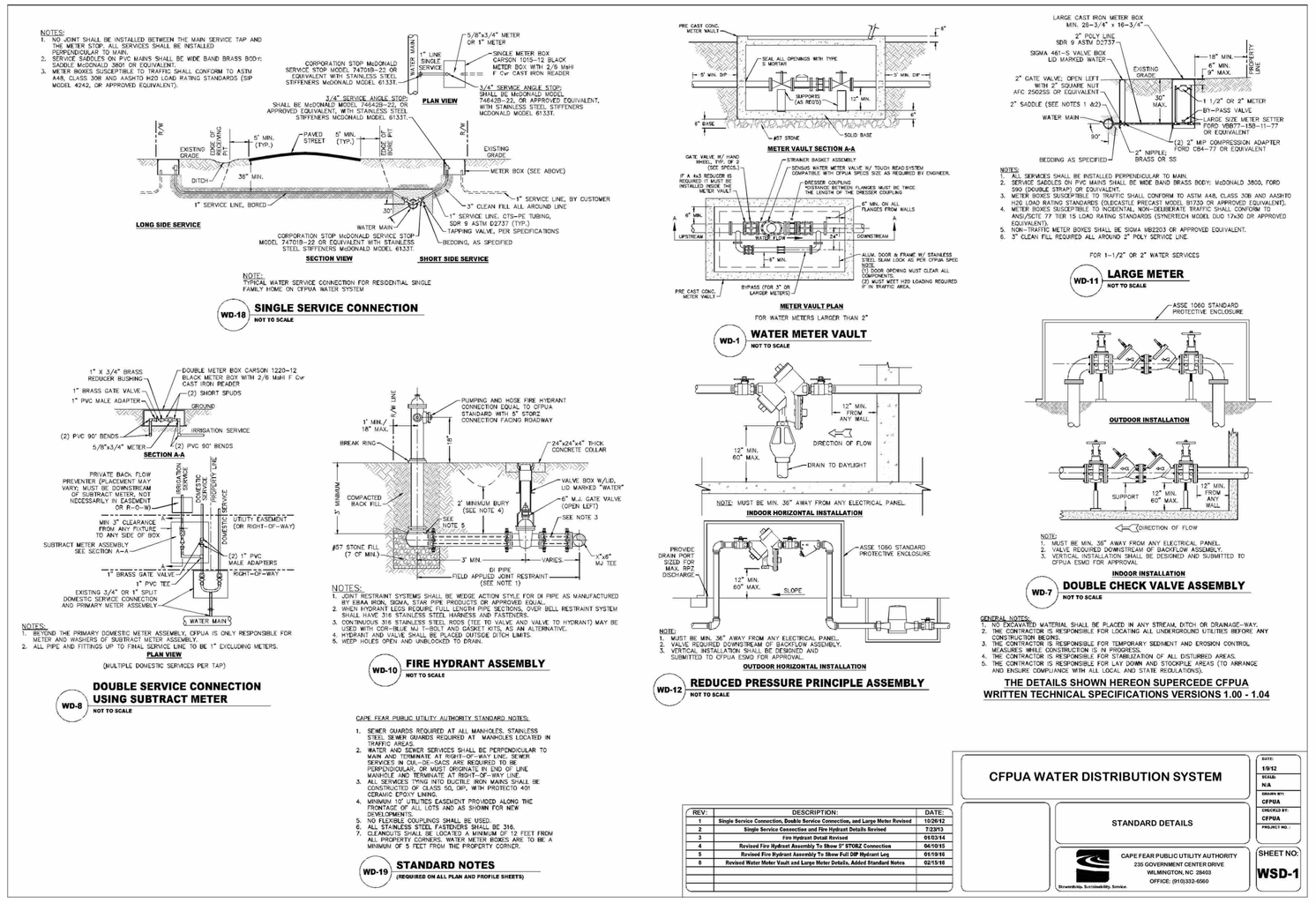

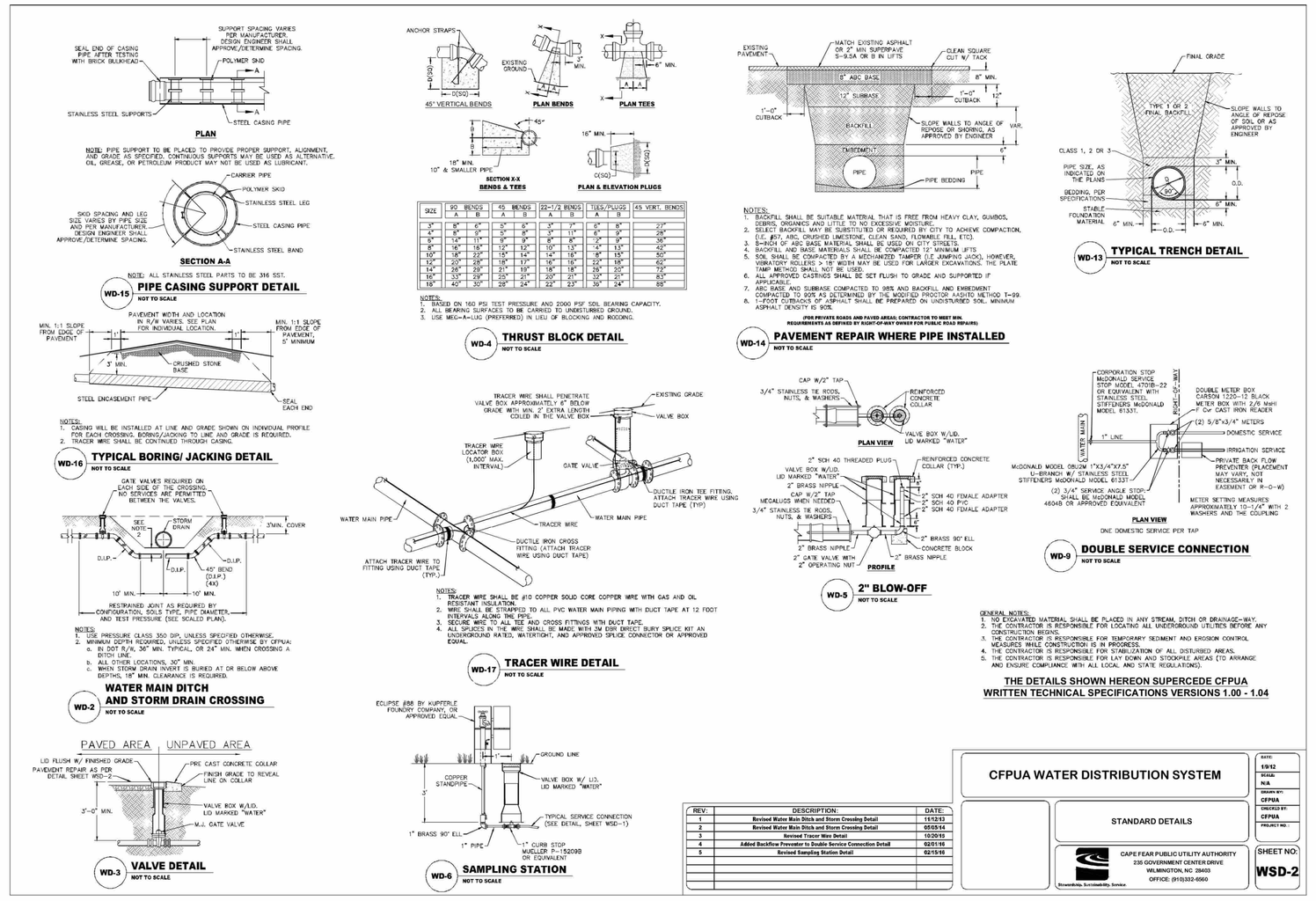

SPECIFICATIONS (OS-1000)

1. 6" inlet/outlet connections, 4" vent connection.
2. Max flow rate: 314 GPM
3. Liquid capacity: 1000 Gallons (133.7 cu. ft.)
4. Oil capacity: 451 Gallons
5. Solids/sediment capacity: 347 Gallons
6. Unit weight w/std. covers: 1400 lbs.
7. Highway traffic load rated, bolted, gas/water tight composite covers. (16,000 lbs)
8. Maximum operating temperature 140˚F continuous.

NOTES

1. 1" thick high density polyethylene walls.
2. Unit supplied with built-in adapter(s) for up to 6" of adjustability. Additional riser(s) available for deeper burial depth.
3. For buried applications.
4. Lifting lug set included for easy install.

ENGINEER SPECIFICATION GUIDE

Striem oil separator model OS-1000 shall be lifetime guaranteed and made in USA of High Density Polyethylene with minimum 1" uniform wall thickness. Separator shall be furnished for below grade installation with field adjustable riser system. Separator flow rate shall be 314 GPM. Separator oil capacity shall be 451 gallons. Sand capacity shall be 347 gallons. Cover shall provide water/gas-tight seal and have maximum 16,000 lbs load capacity.

THIRD PARTY STRUCTURAL ANALYSIS

The OS-1000 has been structurally analyzed in accordance with the requirements of IBC 2012 and ASCE/SEI 7 for direct burial. The maximum burial depth and backfill material are specified in our installation instructions. The structural design has been reviewed and sealed by a professional engineer registered in the state of California. A sealed structural analysis report is available upon request.

OPTIONS

- ☐ **4M** - 4" Male Thread Inlet / Outlet
- ☐ **4P** - 4" Plain End Inlet / Outlet
- ☐ **6M** - 6" Male Thread Inlet / Outlet
- ☐ **8P** - 8" Plain End Inlet / Outlet
- ☐ **C24-HP** (2) - H20 Rated Pickable Cast Iron Cover
- ☐ **CS3** - Clean Sweep Coalescing Media (single)
- ☐ **CS6** - Clean Sweep Coalescing Media (double)

TeleGlide RISER OPTIONS

- ☐ **SR24** (2) - >6"-24"
- ☐ **LR24** (2) - >24"-39"
- ☐ **SR24** (4) - >39"-43"
- ☐ **SR24** (2) + **LR24** (2) - >43"-58"
- ☐ **LR24** (4) - >58"-72"

PO IS NON-CANCELABLE
ORDER IS NON-RETURNABLE

Signature of Approval:
Company:
Date of Approval:
Specifying Engineer:
Engineering Firm:

PROPRIETARY AND CONFIDENTIAL
THE INFORMATION CONTAINED IN THIS DRAWING IS THE SOLE PROPERTY OF **STRIEM, LLC**. ANY REPRODUCTION IN PART OR AS A WHOLE WITHOUT THE WRITTEN PERMISSION OF **STRIEM, LLC**. IS PROHIBITED.

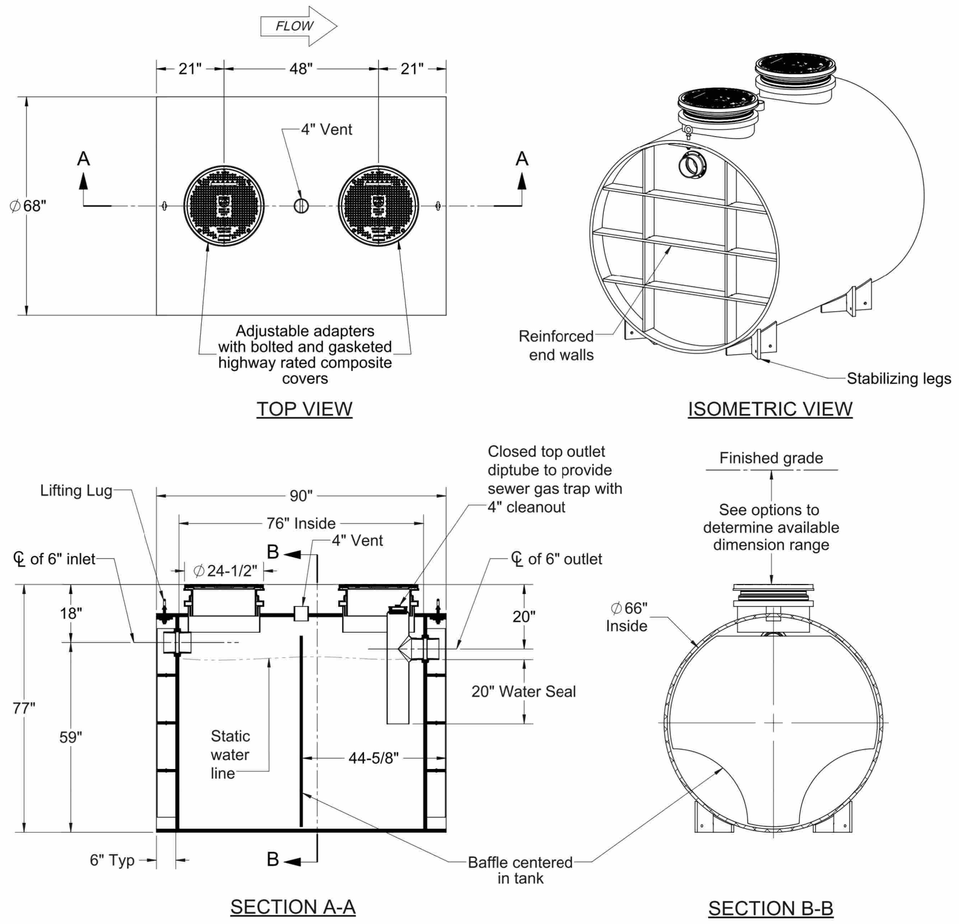

MODEL NUMBER:	OS-1000	SPECIFICATION SHEET
DESCRIPTION:	POLYETHYLENE OIL SEPARATOR 314 GPM 1000 GALLON CAPACITY	Striem 3100 Brinkerhoff Kansas City, KS 66115 Tel: 913-222-1500 Fax: 913-291-0457 www.striemco.com Made in the U.S.A
DWG BY: MJ	DATE: 10/08/18 REV: 0 ECO:	STRIEM

REVISIONS	BY

FREELAND and KAUFFMAN, INC.
Engineers * Landscape Architects
209 West Stone Avenue
Greenville, South Carolina 29609
864-233-5497

PRELIMINARY NOT FOR CONSTRUCTION

AAA CAR WASH
WILMINGTON, NC
MPV PROPERTIES
2400 SOUTH BOULEVARD #300
CHARLOTTE, NC 28203
(704)-248-2100

Approved Construction Plan

	Name	Date
Planning		
Traffic		
Fire		

UTILITY DETAILS
2 OF 2

DRAWN	AJW
CHECKED	BTS
DATE	6/17/2019
SCALE	AS NOTED
DRAWING	21

LANDSCAPE CALCULATIONS

(SEC. 18-448.a) MIN. NUMBER OF TREES REQUIRED
REQUIRED:
15 TREES PER DISTURBED ACRE (2" MIN) RETAINED OR PLANTED ON DISTURBED PORTION OF SITE
1.28 AC. X 15 = 19 - 2" CAL. TREES
PROVIDED:
PRESERVATION OF EXISTING TREES & PLANTING OF NEW TREES TO MEET OTHER REQUIREMENTS.

(SEC. 18-477) STREET YARD LANDSCAPING (WILSHIRE)
REQUIRED:
STREET YARD IS CALCULATED BY MULTIPLYING THE STREET YARD FACTOR (PER ZONING CLASS) BY THE PROPERTY STREET FRONTAGE MINUS THE WIDTH OF DRIVEWAYS.
EVERY 600 SF. OF STREET YARD AREA SHALL CONTAIN 1 CANOPY TREE & 6 SHRUBS
209' - 48' (DRIVEWAY WIDTH-S) = 161'
161 X 4.5 (MULTIPLIER FOR SECONDARY ST. YARD) = 725 SF.
725 SF. / 600 SF. = 1.21
1.21 X 1 = 1 CANOPY TREE
1.21 X 6 = 7 SHRUBS
NO MORE THAN 15% OF STREET YARD CAN BE COVERED W/ IMPERVIOUS SURFACE.
725 SF. X 0.15 = 109 SF. IMPERVIOUS SURFACE ALLOWED
PROVIDED:
1,426 SF. STREET YARD AREA PROVIDED
1 EXISTING 12" MAPLE TO BE PRESERVED (3 CREDITS)
13 SHRUBS (3" TALL)

(SEC. 18-477) STREET YARD LANDSCAPING (S. COLLEGE)
REQUIRED:
STREET YARD IS CALCULATED BY MULTIPLYING THE STREET YARD FACTOR (PER ZONING CLASS) BY THE PROPERTY STREET FRONTAGE MINUS THE WIDTH OF DRIVEWAYS.
EVERY 600 SF. OF STREET YARD AREA SHALL CONTAIN 1 CANOPY TREE & 6 SHRUBS
204' X 9' (MULTIPLIER FOR PRIMARY ST. YARD) = 1,836 SF.
1,836 SF. / 600 SF. = 3.06
3.06 X 1 = 3 CANOPY TREES
3.06 X 6 = 19 SHRUBS
NO MORE THAN 15% OF STREET YARD CAN BE COVERED W/ IMPERVIOUS SURFACE.
1,836 SF. X 0.15 = 276 SF. IMPERVIOUS SURFACE ALLOWED
PROVIDED:
5,963 SF. STREET YARD AREA PROVIDED
1 EXISTING 36" OAK TO BE PRESERVED (6 CREDITS)
1 EXISTING 8" OAK TO BE PRESERVED (2 CREDITS)
1 EXISTING 10" MAPLE TO BE PRESERVED (2 CREDITS)
28 SHRUBS (3" TALL)

(SEC. 18-480) INTERIOR PARKING LOT LANDSCAPING
REQUIRED:
ISLANDS SHALL BE PROVIDED WITHIN PARKING AREAS FOR SHADE TREES TO PROVIDE TREE CANOPY COVERAGE AT MATURITY. PLANTING ISLANDS SHALL ALSO HAVE GROUND COVER OR SHRUBBERY FROM THE APPROVED PLANTINGS LIST TO COVER THE ENTIRE LANDSCAPED ISLAND.
PARKING LOT AREA = 25,931 SF.
30% INTERIOR SHADING REQ'D. FOR IMPERV. AREA BETW. 25,000 SF. - 50,000 SF.
25,931 SF. X 0.30 = 7,779 SF. REQ'D.
MIN. 75% LG. SHADE / CANOPY TREES REQUIRED
PROVIDED:
10 LG. SHADE / CANOPY TREES = 7,07 SF. = (7,070 SF.)
(1 LIVE OAK, 6 ZELKOVA, 3 BLACK GUM)
3 SM. SHADE TREES = 314 SF. = (1942 SF.)
(3 REDBUD)
TOTAL CANOPY COVER = 8,012 SF.
40 SHRUBS & 100 GROUND COVER PLANTS

(SEC. 18-481a) INTERIOR PARKING LOT LANDSCAPING - TREE PLACEMENT
REQUIRED:
LANDSCAPE ISLANDS ARE REQUIRED AT THE ENDS OF CONTINUOUS ROWS OF PARKING CONTAINING TREES TO MEET CANOPY COVER REQUIREMENTS. NO PARKING SPACE SHALL BE MORE THAN 120' FROM A PLANTING ISLAND.
PROVIDED:
TREES PROVIDED AT ENDS OF CONTINUOUS ROWS OF PARKING.
NO PARKING SPACE IS MORE THAN 120' FROM A PLANTING ISLAND WITH A TREE.

(SEC. 18-482) PERIMETER PARKING LOT LANDSCAPING (EAST PROPERTY LINE - ADJ. PARKING LOT)
REQUIRED:
A 10' WIDE LANDSCAPED YARD IS REQUIRED ALONG ANY SIDE OF A PARKING LOT ABUTTING A SEPARATE PARKING LOT, DRIVEWAY, OR RESIDENTIALLY-ZONED PROPERTY. PLANTINGS SHALL CONSIST OF 1 TREE EVERY 18 TO 27 FEET.
243 LF. / 27 = MINIMUM OF 9 TREES
PROVIDED:
2 - EXISTING 12" MAPLES TO BE PRESERVED
7 NEW EVERGREEN TREES (LITTLE GEM MAGNOLIA)

(SEC. 18-482) PERIMETER PARKING LOT LANDSCAPING (SOUTHWEST CORNER PROPERTY LINE - ADJ. PARKING LOT)
REQUIRED:
A 10' WIDE LANDSCAPED YARD IS REQUIRED ALONG ANY SIDE OF A PARKING LOT ABUTTING A SEPARATE PARKING LOT, DRIVEWAY, OR RESIDENTIALLY-ZONED PROPERTY. PLANTINGS SHALL CONSIST OF 1 TREE EVERY 18 TO 27 FEET. IF A BUFFER YARD OR STREET YARD IS REQUIRED THEN THE 10' WIDTH MAY BE INCLUDED AS PART OF THE BUFFER YARD OR STREET YARD.
16 LF. / 27 = MINIMUM OF 5 TREES
PROVIDED:
1 - EXISTING 4" MAGNOLIA TO BE PRESERVED
4 NEW EVERGREEN TREES (LITTLE GEM MAGNOLIA)

(SEC. 18-483) PARKING AREA SCREENING
REQUIRED:
WHEN A PARKING FACILITY IS WITHIN 50 FEET OF A RIGHT-OF-WAY, A LOW BUFFER SHALL BE INCORPORATED INTO THE STREET YARD TO SHIELD TRAFFIC ON THE RIGHT-OF-WAY FROM HEADLIGHTS WITHIN THE PARKING LOT. THE BUFFER SHALL BE A MINIMUM OF 3' IN HEIGHT AND 5' IN WIDTH.
PROVIDED:
41 (3' TALL) EVERGREEN SHRUBS PLANTED IN THE STREET YARDS TO SHIELD TRAFFIC ON WILSHIRE BLVD. & S COLLEGE RD. FROM VEHICLE HEADLIGHTS WITH THE PARKING LOT.

(SEC. 18-482) PERIMETER PARKING LOT LANDSCAPING (SOUTH PROPERTY LINE - ADJ. RESIDENTIAL ZONED PROPERTY)
REQUIRED:
A 10' WIDE LANDSCAPED YARD IS REQUIRED ALONG ANY SIDE OF A PARKING LOT ABUTTING A SEPARATE PARKING LOT, DRIVEWAY, OR RESIDENTIALLY-ZONED PROPERTY. PLANTINGS SHALL CONSIST OF 1 TREE EVERY 18 TO 27 FEET.
200 LF. / 27 = MINIMUM OF 8 TREES
PROVIDED:
8 NEW EVERGREEN TREES (LIVE OAK & LITTLE GEM MAGNOLIA)

(SEC. 18-490) FOUNDATION PLANTINGS
REQUIRED:
FOR PORTIONS OF BUILDINGS ADJACENT TO PARKING FACILITIES OR INTERNAL DRIVE AISLES, FOUNDATION PLANTINGS SHALL BE REQUIRED AND LOCATED BETWEEN THE BUILDING'S FACADES AND THE PARKING OR DRIVE AISLE.
THE AREA OF THE BUILDING FACE ADJACENT TO THE PARKING AREA OR DRIVE AISLE SHALL BE COMPUTED & MULTIPLIED BY A MINIMUM OF 12%. THE RESULTANT SQUARE FOOTAGE SHALL BE PLANTED AS LANDSCAPED AREAS.
79 LF X 24' HT. = 1,896 SF. X 0.12 = 228 SF.
PROVIDED:
292 SF. (12.8%) AS SHOWN ON THE DRAWING
12 SHRUBS

(SEC. 18-503) BUFFERYARD (SOUTH PROPERTY LINE - ADJ. RESIDENTIAL ZONED PROPERTY)
REQUIRED:
COMBINATION PLANTED BUFFER YARD WITH ARTIFICIAL FENCING: IF SOLID ARTIFICIAL FENCING IS USED PROVIDE 2 ROWS OF PLANTED MATERIALS CONSISTING OF A COMBINATION OF TREES AND SHRUBS AT A MINIMUM HEIGHT OF THREE 3' AT PLANTING AND GIVE AT LEAST FIFTY 50% VISUAL OPACITY OF THE FENCE AT PLANTING.
PROVIDED:
27' WIDE LANDSCAPE BUFFER WITH EXISTING SOLID WOOD FENCE
2 ROWS OF NEW LG. GROWING EVERGREEN SHRUBS SPACED 6' ON CENTER (ANISE & OSMANTHUS)
SHRUBS WILL BE A MIN. OF 3' TALL AT PLANTING.

(SEC. 18-504) SCREENING FOR DUMPSTERS
REQUIRED:
A VISUAL SCREEN SHALL BE REQUIRED TO SHIELD THE USE FROM THE VIEW OF ANY ADJACENT PROPERTY OR RIGHT-OF-WAY. SCREENING SHALL BE A MINIMUM OF 8 FEET IN HEIGHT ALONG ANY SIDE OR REAR PROPERTY LINE. THE SCREENING SHALL CONSIST OF LIVING AND NONLIVING MATERIAL AS SPECIFIED.
PROVIDED:
SOLID DUMPSTER ENCLOSURE & LG. GROWING EVERGREEN SHRUBS PROVIDED.

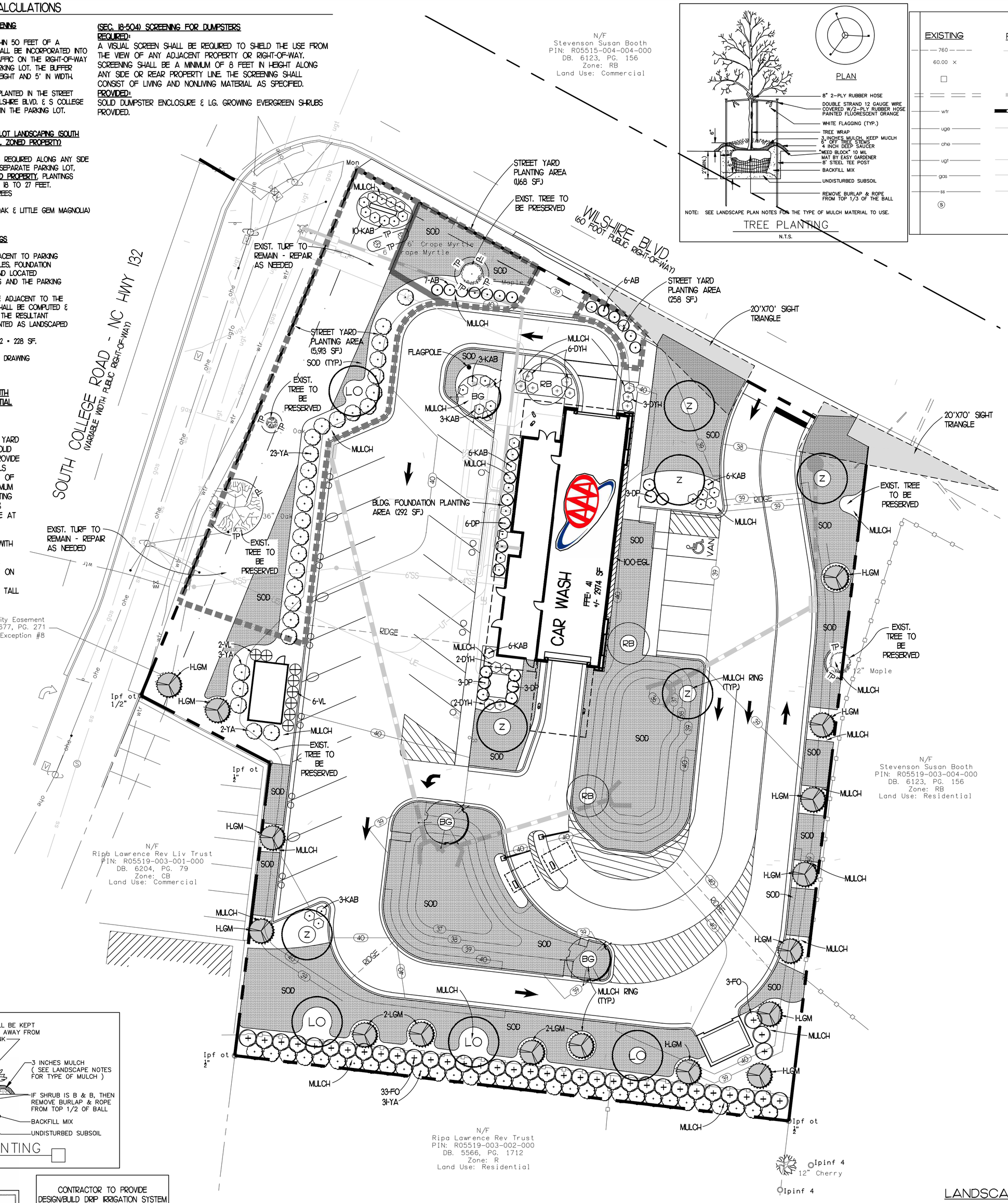

LEGEND

EXISTING	PROPOSED	DESCRIPTION
760	760	CONTOUR LINE
60.00 ×		
		STORM DRAIN INLET
		STORM DRAIN PIPE
w/r		WATER LINE
uge	UE	UNDERGROUND ELECTRIC LINE
ohe		OVERHEAD ELECTRIC LINE
ugt	UT	UNDERGROUND TELEPHONE LINE
gas	G	GAS LINE
ss	SS	SANITARY SEWER LINE
Ⓢ	●	MANHOLE
		LIGHT POLE

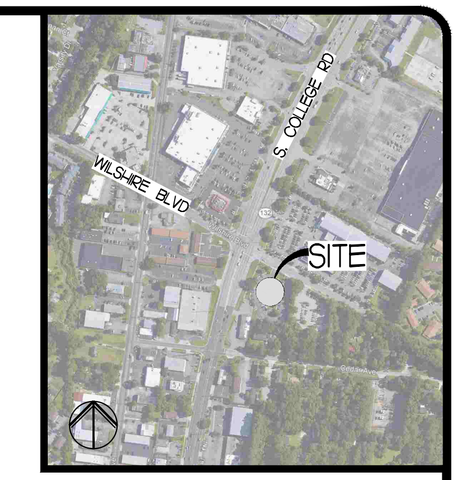

PLANT LIST

	QUANTITY	SYMBOL	CODE	SCIENTIFIC NAME	COMMON NAME	SIZE REQUIREMENTS	SPACING
TREES	4	LO	LO	QUERCUS VIRGINIANA	LIVE OAK	2"-2.5" MIN. CALIPER, B&B	AS SHOWN
	3	BG	BG	NYSSA SYLVATICA	BLACK GUM	2"-2.5" MIN. CALIPER, B&B	AS SHOWN
	6	Z	Z	ZELKOVA SERRATA 'GREEN VASE'	GREEN VASE ZELKOVA	2"-2.5" MIN. CALIPER, B&B	AS SHOWN
	3	RB	RB	CERCIS CANADENSIS	EASTERN REDBUD	8'-10' MIN. HEIGHT, B&B	AS SHOWN
	16		LGM	MAGNOLIA GRANDIFLORA 'LITTLE GEM'	LITTLE GEM SOUTHERN MAGNOLIA	8'-10' MIN. HEIGHT, B&B	AS SHOWN
SHRUBS	36		FO	OSMANTHUS FORTUNEI	FORTUNE'S OSMANTHUS	3' MIN. HT.	6' O.C.
	60		YA	ILLICIUM PARVIFLORUM	YELLOW ANISE	3' MIN. HT.	6' O.C.
	13		AB	ABELIA X GRANDIFLORA	GLOSSY ABELIA	3' MIN. HT.	4.5' O.C.
	8		VL	LIGUSTRUM JAPONICUM 'VARIEGATUM'	VARIEGATED LIGUSTRUM	2' MIN. HT.	AS SHOWN
	32		KAB	ABELIA GRANDIFLORA 'KALEIDOSCOPE'	KALEIDOSCOPE GLOSSY ABELIA	12" MIN. HT.	±4' O.C.
	15		DP	PITTOSPORUM TOBIRA 'WHEELER'S DWARF'	WHEELER'S DWARF PITTOSPORUM	12" MIN. HT.	±4' O.C.
	13		DYH	ILEX VOMITORIA 'STOKES DWARF'	STOKES DWARF YAUPON HOLLY	12" MIN. HT.	±4' O.C.
COVER GROUND	100		EGL	LIRIOPE MUSCARI 'EMERALD GODDESS'	EMERALD GODDESS LIRIOPE	PINT	1.5' O.C.

LANDSCAPE NOTES

1. ALL PLANT MATERIAL SHALL BE NURSERY GROWN AND SHALL CONFORM TO THE STANDARDS OF THE MOST RECENT EDITION OF THE "AMERICAN STANDARD FOR NURSERY STOCK," PUBLISHED BY THE AMERICAN ASSOCIATION OF NURSERYMEN.
2. ALL PLANTS MUST BE HEALTHY, VIGOROUS MATERIAL, FREE OF PESTS AND DISEASE.
3. ALL TREES MUST BE STRAIGHT-TRUNKED AND FULL HEADED AND MEET ALL REQUIREMENTS SPECIFIED.
4. ALL PLANTS ARE SUBJECT TO THE APPROVAL OF THE LANDSCAPE ARCHITECT BEFORE, DURING, AND AFTER INSTALLATION.
5. ALL TREES MUST BE GUYED OR STAKED AS SHOWN IN THE DETAILS.
6. ALL PLANTING AREAS MUST BE COMPLETELY MULCHED AS SPECIFIED.
7. PRIOR TO CONSTRUCTION, THE CONTRACTOR SHALL BE RESPONSIBLE FOR LOCATING ALL UNDERGROUND UTILITIES AND SHALL AVOID DAMAGE TO ALL UTILITIES DURING THE COURSE OF THE WORK. THE CONTRACTOR IS RESPONSIBLE FOR REPAIRING ANY AND ALL DAMAGE TO UTILITIES, STRUCTURES, SITE APPURTENANCES, ETC. WHICH OCCURS AS A RESULT OF THE LANDSCAPE CONSTRUCTION.
8. THE CONTRACTOR IS RESPONSIBLE FOR VERIFYING ALL QUANTITIES SHOWN ON THESE PLANS BEFORE PRICING THE WORK.
9. THE CONTRACTOR IS RESPONSIBLE FOR FULLY MAINTAINING (INCLUDING BUT NOT LIMITED TO: WATERING, SPRAYING, MULCHING, FERTILIZING, ETC.) ALL PLANTING AND LAWN AREAS UNTIL THE WORK IS ACCEPTED IN TOTAL BY THE OWNER.
10. THE CONTRACTOR SHALL COMPLETELY GUARANTEE ALL PLANT MATERIAL FOR A PERIOD OF ONE (1) YEAR BEGINNING ON THE DATE OF TOTAL ACCEPTANCE. THE CONTRACTOR SHALL PROMPTLY MAKE ALL REPLACEMENTS BEFORE OR AT THE END OF THE GUARANTEE PERIOD.
11. ANY PLANT MATERIAL WHICH DIES, TURNS BROWN, OR DEFOLIATES (PRIOR TO TOTAL ACCEPTANCE OF THE WORK) SHALL BE PROMPTLY REMOVED FROM THE SITE AND REPLACED WITH MATERIAL OF THE SAME SPECIES, QUANTITY, AND SIZE AND MEETING ALL PLANT LIST SPECIFICATIONS.
12. AREAS SHOWN AS MULCH SHALL RECEIVE 3" OF SHREDDED HARDWOOD BARK MULCH.
13. THE CONTRACTOR SHALL PERFORM A SOIL TEST ON THE EXISTING AND PROPOSED TOP SOIL AND APPLY LIME AND A PREMIUM QUALITY SLOW RELEASE FERTILIZER AS RECOMMENDED.
14. AREAS SHOWN AS SOD SHALL RECEIVE BERMUDA SOD. SOD AREAS SHALL BE BE TOPSOILED AND FERTILIZED ACCORDING TO THE SOIL REPORT RECOMMENDATIONS FOR BERMUDA SOD. THE CONTRACTOR SHALL WATER AND MAINTAIN THE TURF UNTIL A HEALTHY STAND IS ESTABLISHED.
15. "CURLEX" BIODEGRADABLE EROSION CONTROL BLANKETS BY AMERICAN EXCELSIOR COMPANY OR EQUAL ARE TO BE USED ON SLOPES 3:1 AND GREATER AND IN DRAINAGE SWALES.
16. ALL PLANTING AREAS SHALL CONTAIN SOILS SUITABLE FOR PLANTING. SOILS SHALL BE CLEAN AND FREE OF ALL CONSTRUCTION MATERIALS. THE TOP 12 INCHES OF SOIL SHALL BE LOOSE. IF PREVIOUSLY COMPACTED, IT SHALL BE LOOSENED BY TILLING OR OTHER MEASURE TO A DEPTH OF 12 INCHES. THE TOP SIX INCHES OF SOIL SHALL BE CLEAN TOPSOIL, OR OTHER CLEAN SOILS AMENDED WITH ORGANIC MATERIAL. THIS REQUIREMENT SHALL BE MET PRIOR TO THE INSTALLATION OF LANDSCAPING AND/OR SEEDING.
17. THE CONTRACTOR SHALL SPOIL ANY EXCESS TOPSOIL LOCATED ON THE SITE THAT IS NOT REQUIRED TO PERFORM THE LANDSCAPE OPERATION. ALSO, IF INSUFFICIENT TOPSOIL IS PRESENT ON THE SITE THE CONTRACTOR IS REQUIRED TO HAVE TOPSOIL BROUGHT INTO THE SITE FOR THE LANDSCAPE OPERATION.
18. CARE SHOULD BE TAKEN TO ENSURE THAT WATER ENTERING THE BEDDING SOILS DRAINS AWAY FROM THE BUILDING AND PAVEMENT PERIMETERS.

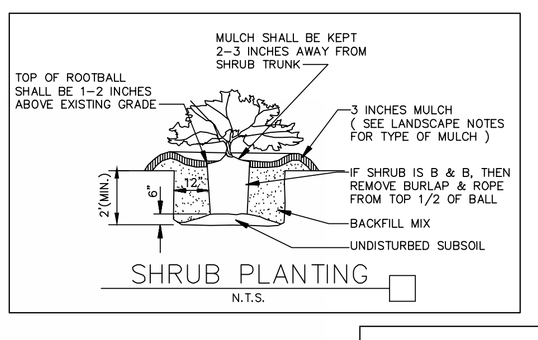

EVERY DIGGING JOB REQUIRES A CALL - EVEN SMALL PROJECTS LIKE PLANTING TREES OR SHRUBS. YOU HIT AN UNDERGROUND UTILITY LINE, YOU'LL PAY FOR THE DAMAGE YOURSELF OR THOSE AROUND YOU. DISRUPT SERVICE TO AN ENTIRE NEIGHBORHOOD AND POTENTIALLY BE RESPONSIBLE FOR FINES AND REPAIR COSTS.

SMART DIGGING MEANS CALLING 811 BEFORE EACH JOB. WHETHER YOU ARE A HOMEOWNER OR A PROFESSIONAL EXCAVATOR, THE CALL TO 811 GETS YOUR UNDERGROUND UTILITY LINES MARKED FOR FREE.

Approved Construction Plan	
Name	Date
Planning	
Traffic	
Fire	

CONTRACTOR TO PROVIDE DESIGN/BUILD DRIP IRRIGATION SYSTEM

DRIP IRRIGATION LINES MAY BE PLACED WITHIN DUKE ENERGY ROW. NO OTHER IRRIGATION COMPONENTS ARE PERMITTED

NOTE: PRIOR TO ANY CLEARING, GRADING, OR CONSTRUCTION ACTIVITY, TREE PROTECTION FENCING WILL BE INSTALLED AROUND PROTECTED TREES OR GROVES OF TREES. NO CONSTRUCTION WORKERS, TOOLS, MATERIALS, OR VEHICLES ARE PERMITTED WITHIN THE TREE PROTECTION FENCING.

LANDSCAPE LEGEND

BERMUDA SOD

STREET YARD PLANTING AREA

LANDSCAPE PLAN

SCALE 1" = 20'

REVISIONS	BY

FREELAND and KAUFFMAN, INC.
Engineers * Landscape Architects
209 West Stone Avenue
Greenville, South Carolina 29609
864-233-5497

PRELIMINARY NOT FOR CONSTRUCTION

AAA CAR WASH
WILMINGTON, NC
MPV PROPERTIES
2400 SOUTH BOULEVARD, #300
CHARLOTTE, NC 28203
(704)-248-2100

DRAWN	AJW
CHECKED	BTS
DATE	6/17/2019
SCALE	AS NOTED
DRAWING	22